LEELANAU COUNTY PARKS & RECREATION COMMISSION
Myles Kimmerly Park Committee

Wednesday, January 19, 2022 – 3:45 p.m.,
or immediately following the Regular Session, whichever is later
Leelanau County Government Center, Suttons Bay, Michigan
https://www.leelanau.gov/meetingdetails.asp?MAId=2254

(Please silence cellular/electronic devices)

(Proceedings of the meeting are being recorded and are not the official record of the meeting. The formally approved/accepted written copy of the minutes will be the official record of the meeting.)

AGENDA

Call to Order

Pledge of Allegiance

Roll Call

Approval of Agenda and Late Additions/Deletions

Public Comment

Action Items –

1. Approval of Minutes.
2. Portable Toilets Shelter.
3. Shed Addition to Maintenance Building.
4. Paved Loop Trail.

Public Comment

Board Member Comment

Motion to Adjourn

Leelanau County Parks and Recreation Commission
Myles Kimmerly Park Committee
Wednesday, August 25, 2021, 9:00 a.m.
On site meeting at Myles Kimmerly Park and Continued
at the Leelanau County Government Center, Suttons Bay, Michigan
Tentative Minutes – Meeting Recorded
https://www.leelanau.gov/meetingdetails.asp?MAId=2184

The meeting was called to order on-site at Myles Kimmerly County Park, 1397 Burdickville Rd., Maple City, MI, by Committee Chairman Don Frerichs at 9:02 a.m.

The "Pledge of Allegiance" was deferred by Committee Chairman Frerichs.

Roll Call: Steve Christensen
Don Frerichs, *Chairman*
Rick Robbins
Michael Smith, *Absent*

Staff Present: W. Scott Bradley, Maintenance Worker
Laurel Evans, Executive Assistant

Guests Present:
None.

Agenda Additions/Deletions:
Approval of the agenda was deferred until the meeting reconvened at the Government Center.

Public Comment:
None.

Action Items –
Tour of Myles Kimmerly County Park:
The grub shack interior was inspected to determine its contents and to discuss options for relocating the pressure tank that currently resides inside the shack. There was discussion about burying the pressure tank or replacing it. Also discussed was whether to relocate a sizable amount of soccer gear to the smaller shed near the soccer field or to request that the owners of the gear take it away and store it elsewhere. The future of the electrical and irrigation panel, which currently resides on the outside wall of the grub shack, was also discussed. Constructing a small, stand-alone pedestal was mentioned. Because the project cannot begin until the irrigation is no longer needed, a timeline was briefly discussed. The group moved to the smaller shed near the soccer fields; it was completely empty, making it a good option to house soccer gear. Evans reminded the group that the County was under no obligation to continue this practice. The group stopped at the gazebo where the Porta-potties are currently located. They discussed taking down the gazebo and relocating the Porta-potties to the pad where the proposed new grub shack would be built. The group trekked to the upper parking lot area to

discuss options for a trail. Frerichs reminded the group that (in order for the) trail had to have universal access, it needed to be short and flat. Christensen suggested beginning the trail system with a single loop designated as ADA-compliant, then gradually adding other loops that did not have this designation. Discussion ensued regarding the upcoming termination of the septic field lease and how that area would be open for additional park development – possibly for a dog park or expansion of the loop trail. Also discussed was the need for an update of the park plan and repair/replacement of the rock and wire boundary around the upper parking lot.

Public Comment:
None.

Board Member Comment:
None.

Adjournment:
Due to a lack of quorum at 10:00 a.m. (Robbins needed to leave), Committee Chairman Frerichs called a recess of the Committee until 1:00 p.m., Wednesday, September 15, 2021, (https://www.leelanau.gov/meetingdetails.asp?MAId=2194) at which time the meeting will reconvene at the Government Center.

_____
Lori Eubanks, Recording Secretary

Leelanau County Parks and Recreation Commission
Myles Kimmerly Park Committee
Tuesday, September 15, 2021, 1:00 p.m.
Leelanau County Government Center, Suttons Bay, Michigan
Tentative Minutes – Meeting Recorded
https://www.leelanau.gov/meetingdetails.asp?MAId=2194

The meeting of the Myles Kimmerly Park Committee was reconvened (from the previously held off-site meeting of August 25, 2021) by Committee Chairman Don Frerichs at 1:06 p.m.

The "Pledge of Allegiance" was waived.

Roll Call: Steve Christensen
Don Frerichs, *Chairman*
Rick Robbins, *Absent/Prior notice*
Michael Smith

Staff Present: Laurel Evans, Executive Assistant
Jerry Culman, Maintenance Director

Guests Present:
None.

Public Comment:
None.

Action Items –
Grub/Storage Shack Renovation:
Committee Chairman Frerichs reported that the County Board of Commissioners approved the removal of the grub shack at Myles Kimmerly Park for a cost of one dollar. Frerichs turned the floor over to Maintenance Director Culman for more details. Culman reported that the irrigation lines were being blown out and shut down today (September 15, 2021) leaving no potable water at the park (a month earlier than normal). The pressure tank that currently resides in the grub shack will be buried on the north side of the grub shack pad, and the panel for the electrical and irrigation will be relocated to the north side of the pad and protected by a split rail fence. The cost to bury the pressure tank is $2,600.00, and the cost for the electrical and water has yet to be approved. Culman said Tim Newman, owner of Kasson Contracting, Inc., was not available to move the shack until the second week of October, but he felt cautiously optimistic that all will go well and by the end of October (2021), the grub shack will be removed with minimal disruption or damage. Culman added that the plan is to move the shack to the west (toward the driveway) to minimize damage to the surrounding area. He said that once the shack is gone, his crew would clean up the area and bring in topsoil to stabilize the hole left from the removal of the shack.

Frerichs proposed Option #3 of the three renderings (on file) created by Commissioner Walters for the design of the replacement of the grub shack and the surrounding area. Option #3

provides a concrete slab, a covered area for toilets, and a patio. Frerichs said he would like to have the slab put down this year if time and cost were not an issue. Smith and Christensen concurred. To afford more storage in the new structure, Frerichs proposed a larger pad (18' x 32') than what was outlined in Option #3; Smith concurred. Christensen did not see the need for "concrete without a purpose" and preferred to stick with the plan as outlined. He did not think it was incumbent on the County to provide storage for soccer gear and, therefore, he did not see a need to change the design plan to accommodate for more storage. He added that the line-marking equipment could be stored in the smaller shed. Culman said extending the pad would help mitigate erosion issues by catching runoff from the roof. Smith suggested installing drain tile or spreading drain stone to mitigate erosion. Frerichs suggested eaves and Evans suggested a drain basin with a perennial garden. Culman highly discouraged drain stone for safety reasons. He said the stones become projectiles when the lawn is mowed or if the public toss the stones. Culman supported a solution that did not require additional maintenance. Christensen added that he plans to include in the permit fill dirt to use for building up and sloping the area to help mitigate erosion.

Motion by Christensen to recommend to the Parks & Rec Commission Option #3 for replacement of the grub shack, with details to be discussed at today's Parks and Rec Commission meeting (at 2 p.m. – September 15, 2021). Seconded by Frerichs.
Discussion – None.
Ayes – 3 (Christensen, Frerichs, Smith)
No – 0 Absent – 1 (Robbins) Motion Passes.

Committee Chairman Frerichs said that at the offsite meeting at Myles Kimmerly Park, they identified the need for repair or replacement of the rock and wire boundary around the upper parking lot. He said the downed wire between the rocks creates a tripping hazard. Christensen said Maintenance Worker Scott Bradley had suggested setting granite boulders as a new boundary, though they are pricey. He also suggested limestone slabs, which are more readily available and less costly. Christensen added that they also discussed expanding the upper parking lot. He suggested asking Commissioner Walter to sketch some ideas for a barrier system for the lot. No firm decisions were made on these projects.

Though not on the agenda, Committee Chairman Frerichs opened a discussion regarding capital outlay as it related to Myles Kimmerly Park. He wanted to ensure nothing was left off the list and check that the committee members were in agreement regarding the priority of their items on the list. Grub Shack was #1, pickle ball courts were #4, the loop trail was #5, and the dog park was #6. Frerichs said the loop trail would not be considered until 2023, due to the grant funding timeline. He questioned if pickle ball should be a higher priority than the dog park. Christensen responded that it was apparent from discussions at the offsite meeting that the dog park needs a lot more thought and consideration, so pickle ball courts before the dog park was the right priority. Smith added that Bradley had said that pickle ball was very popular and should be moved to an even higher priority than #4.

Evans complimented committee members for pushing the idea of an offsite meeting at Myles Kimmerly Park. She said the onsite meeting incited visions for enhancements and she felt it was a very productive endeavor. She recommended one, onsite park meeting a year because park plans change and it would be beneficial for new committee members. Evans also reiterated an idea she discussed at the off-site meeting – to move the Parks and Rec monthly meetings ahead of the monthly Board of Commissioners' meetings to stay ahead of the curve on Parks and Rec business that needing to be presented to the Board of Commissioners.

One last non-agenda item was briefly discussed regarding committee meeting structure. Committee Chairman Frerichs inquired if the committee members were content to continue with individual committee meetings versus meetings as a whole. It was unanimous that the desire was to continue with individual committee meetings.

Public Comment:
None.

Board Member Comment:
None.

Adjournment:
Motion by Christensen to adjourn. Seconded by Smith.
Ayes – 4 (Christensen, Frerichs, Smith)
No – 0 Absent – 1 (Robbins) **Motion Passes.**

The meeting adjourned to the call of Committee Chairman Frerichs at 1:53 p.m.

_____
Lori Eubanks, Recording Secretary

Leelanau County Parks and Recreation Commission
Myles Kimmerly Park Committee – Special Meeting
Wednesday, November 17, 2021, 2:30 p.m.
Leelanau County Government Center, Suttons Bay, Michigan
Tentative Minutes – Meeting Recorded
https://www.leelanau.gov/meetingdetails.asp?MAId=2227

The meeting of the Myles Kimmerly Park Committee was called to order by Committee Chairman Don Frerichs at 2:35 p.m.

Chairman Frerichs led the "Pledge of Allegiance."

Roll Call: Steve Christensen
Don Frerichs, *Chairman*
Rick Robbins, *(2:41 p.m. arrival)*
Michael Smith

Staff Present: Laurel Evans, Executive Assistant
W. Scott Bradley, Maintenance Worker

Guests Present:
Jon Walter

Approval of Agenda and Late Additions/Deletions:
Motion by Christensen to approve the agenda, as presented. Seconded by Smith.
Ayes – 3 (Christensen, Frerichs, Smith)
No – 0 Absent – 1 (Robbins) Motion Passes.

Action Items –
Approval of Minutes:
(Deferred until next month.)

Update on Removal of the Grub Shack:
Bradley reported that Tim Newman (Kasson Contracting, Inc.) had not removed the old grub shack. Frerichs suggested selling the shack to someone else, adding that Commissioner Smith had expressed an interest in the shack. Evans said she would ask County Administrator Chet Janik to give Tim Newman a call to check on the status of the shack's removal. Walter commented that it would be worthwhile to salvage the plywood floor of the old grub shack, given the current price of plywood. Christensen reported that there was now flexibility about where to relocate the new grub shack because the electrical and irrigation instrumentation had been installed on freestanding boards. *(Robbins joined meeting at this point.)* Christensen discussed the area where the gazebo now resides as a potential location for the new grub shack and a new parking lot at the old grub shack site. Storage and office space would be addressed by constructing a lean-to on the backside of the maintenance building rather than incorporating these elements into the new building. Walter reviewed a seven-page handout that included two site plans and side views for each plan. Bradley concurred with the idea of office space

created by the construction of a lean-to. Christensen suggested that fill needed for the project could come from the upper parking lot; however, Robbins was concerned this option would create a whole new project and an expense that was not anticipated. There was discussion about purchasing fill from Kasson Construction or from the County Road Commission. Christensen asked and Walter agreed to construct a cost estimate for the plans discussed.

Pave Loop Trail Discussion:
Robbins reported that he submitted as a priority from the Parks and Recreation Commission a request to the County Commissioners for $250,000.00 for paving the loop trail. (He thought the Commission instead wrote down $260,000.00.) Robbins said he removed his Facebook post requesting input from the community about the loop trail because he was not receiving helpful comments. Frerichs wondered if the community would question the expense of paving the trail if only a small percentage of the population used it. Robbins added that Glen Lake Community Schools recently completed a project that is everything and more like the proposed Myles Kimmerly Park loop trail and wondered why Glen Lake did not make an effort to collaborate. Regardless, Robbins thought the loop trail project at Myles Kimmerly should not be abandoned. Evans strongly urged Commission members to create a plan before submitting anything to the County Commissioners so that unexpected issues would be mitigated. Returning to the topic of the grub shack, Smith suggested getting the fill dirt in place before winter so it had a chance to settle. Evans reminded Smith if the expense of the fill dirt exceeds $2,000.00, it would need approval by the County Commissioners. Christensen said they should wait until costs are received from Walter before moving forward. Discussion ensued about how far $250,000.00 would go towards paving the trail, where to place the trail in consideration of future plans for the park, whether to have the current park plan revised, and which to do first, create a plan for the trail or revise the park plan. Robbins commented that future expansion of the trail would gain more support from the County Board if the trail had high usage by the public.

Public Comment:
None.

Board Member Comment:
None.

Adjournment:
Motion by Christensen to adjourn. Seconded by Smith.
Ayes – 4 (Christensen, Frerichs, Robbins, Smith)
No – 0 Absent – 0 **Motion Passes.**

The meeting adjourned to the call of Chairman Frerichs at 3:20 p.m.

_____
Lori Eubanks, Recording Secretary

Donald Frerichs
569 S Shore Dr
Northport, MI 49670
Ph: 2313865120

Store: TRAVERSE CITY
4155 US HIGHWAY 31 S
TRAVERSE CITY, MI 49685
Ph: 231-943-0607
Fx: 231-943-3571
Team Member: Bob D MM

Project Name: Chat Request
Design # 319751818231

Take this packet into any Menards store, or recall online from your Saved Designs page on the Menards.com website.

Estimated price: $5,529.76 *

* Today's estimated price, future pricing may go up or down. Refer to building specification section for more details.

Quote # 325532 Version # 1

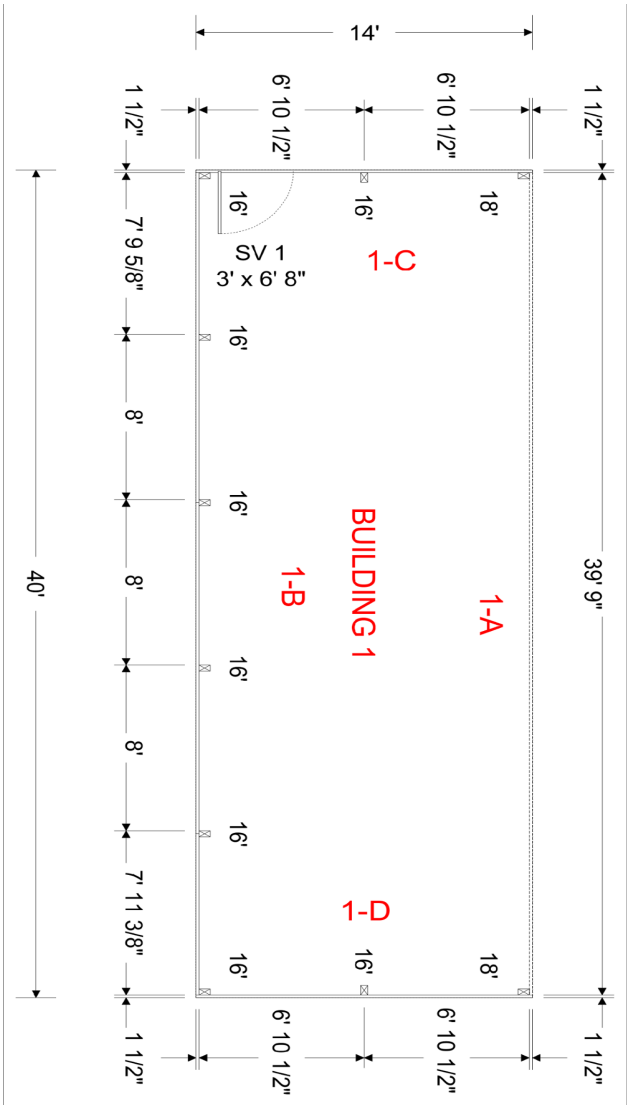

Congratulations, you have taken the first step towards making your new post frame building a reality!

☑ **Step One -** You have selected Menards to provide you with superior products produced by Midwest Manufacturing that will meet your needs. For a more detailed look at these premium products select one of the links below or visit us on the web at www.midwestmanufacturing.com.

Premium Steel Panels - Pro-Rib and Premium Pro-Rib steel panels are your best options for steel panels in the market.

- ★ Steel Panels are Grade 80 (full hard steel).
- ★ Prepaint zinc phosphate coating for superior paint paint adhesion - available in multiple colors.
- ★ Pro-Rib features a limited 40 year paint warranty.
- ★ Premium Pro-Rib has a limited lifetime paint warranty.
- ★ All painted panels are ENERGY STAR rated, using a Cool Chemistry paint system.
- ★ Pro-Rib and Premium Pro-Rib panels are UL Certified for Wind Uplift UL 580, Fire Resistance UL 790, Impact Resistance of Roof UL 2218.
- ★ Pro-Rib and Premium Pro-Rib panels are IRC and IBC compliant.

Engineered Trusses - Post frame trusses are specifically engineered to meet your application and geographic location.

- ★ All Midwest Manufacturing trusses can be supplied with engineered sealed prints.
- ★ TPI approved and third party inspected.

Laminated Columns - Designed to replace standard treated posts as vertical supports in Post Frame Construction.

- ★ Columns 20' or less are treated full length.
- ★ Lifetime Warranty against rot and decay.
- ★ Columns over 20' in length are reinforced with 20 gauge stainless steel plates at each splice location.
- ★ Lower portion of columns treated for in ground use.
- ★ Rivet Clinch Nails provide superior holding power.
- ★ Columns provide superior truss to pole connection.

Pressure Treated Lumber - All treated post and grade board used in your building will safely and effectively resist decay.

- ★ Treated to AWPA compliance.
- ★ Post and grade board offer a lifetime warranty against rotting and decay.

☐ **Step Two -** Review the enclosed personalized post frame building design to make sure it matches your specifications. If you have any questions about the design or specifications of your building contact Kal Lund at klund@midwestmanufacturing.com who will work with you to modify the design to fit your needs.

☐ **Step Three -** Contact your Menards store sales team member to purchase your post frame building. The store sales team will provide pricing for any items that are not included on your estimate from Midwest Manufacturing.

☐ **Step Four -** Order your materials with confidence from Menards knowing that you have chosen the right materials at the right price for your project.

☐ **Step Five -** Set up delivery or arrange to pick your materials up directly from Midwest Manufacturing.*

*Delivery charge is not included in price. Items ordered to complete your building from vendors other than Midwest Manufacturing are not available for pickup from the plant.

Estimate #:	325532
Design #:	1
Store:	TRAVERSE CITY
Guest:	Donald Frerichs

Post Frame Building Estimate

Project Name: Chat Request
Section: Building Specifications
Date: 12-07-2021 07:39 AM

Building Specifications

Dimensions (W x L x H):	14' x 40' x 9'	Post Type:	Post - 4' Embedment
Floor Type:	Dirt / Gravel	Trim Color:	Galvanized
Girt Type:	Flat	Eave Trim:	Included

Roof Specifications

Pitch:	2.0 / 12	Roof Covering:	ProRib
Truss Spacing:	8' O.C.	Roof Color:	Galvanized
Heel Height:	10 7/8"	1-A, 1-B, 1-C, 1-D Overhang:	0.0"

Wall Specifications

Sidewall Post Spacing:	40'	Wall Color:	Galvanized
Wall Covering:	ProRib		

Building Accessories

Bottom Trim:	Included	Outside Closure Strip:	So Outside Closure Strip
Inside Closure Strip:	S.o. Inside Closure Strip		

Windows and Doors

Mastercraft Rh Clear Glass:	Mastercraft Rh Clear Glass - 3' x 6' 8"	48x36 Select 100 Slid Ig:	48x36 Select 100 Slid Ig - 4' x 3'

Designer Notes:

Please verify material with guest before ordering
Please verify all steel lengths and trims before ordering
Please verify all steel and trim colors before ordering

ITEMS SHOWN IN RED WERE DELETED FROM MATERIAL LIST

Floor type (concrete, dirt, gravel) is NOT included in estimated price. The floor type is used in the calculation of materials needed. Labor, foundation, steel beams, paint, electrical, heating, plumbing, and delivery are also NOT included in estimated price. This is an estimate. It is only for general price information. This is not an offer and there can be no legally binding contract between the parties based on this estimate. The prices stated herein are subject to change depending upon the market conditions. The prices stated on this estimate are not firm for any time period unless specifically written otherwise on this form. The availability of materials is subject to inventory conditions. MENARDS IS NOT RESPONSIBLE FOR ANY LOSS INCURRED BY THE GUEST WHO RELIES ON PRICES SET FORTH HEREIN OR ON THE AVAILABILITY OF ANY MATERIALS STATED HEREIN. All information on this form, other than price, has been provided by the guest and Menards is not responsible for any errors in the information on this estimate, including but not limited to quantity, dimension and quality. Please examine this estimate carefully. MENARDS MAKES NO REPRESENTATIONS, ORAL, WRITTEN OR OTHERWISE THAT THE MATERIALS LISTED ARE SUITABLE FOR ANY PURPOSE BEING CONSIDERED BY THE GUEST. BECAUSE OF WIDE VARIATIONS IN CODES, THERE ARE NO REPRESENTATIONS THAT THE MATERIALS LISTED HEREIN MEET YOUR CODE REQUIREMENTS. THE PLANS AND/OR DESIGNS PROVIDED ARE NOT ENGINEERED. LOCAL CODE OR ZONING REGULATIONS MAY REQUIRE SUCH STRUCTURES TO BE PROFESSIONALLY ENGINEERED AND CERTIFIED PRIOR TO CONSTRUCTION.

Front View

Back View

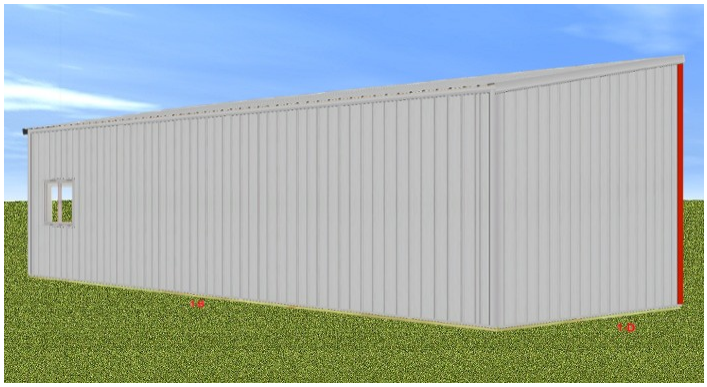

Color shows approximate tone. Color of actual product may vary from what is pictured due to differences in printing and resolution. Please visit your Menards store to view a steel color sample or request a color sample from Midwest Manufacturing at steel@midwestmanufacturing.com

Laurel Evans

From: Donald Frerichs <donfrerichs@gmail.com>
Sent: Thursday, January 13, 2022 12:12 PM
To: Don Frerichs
Cc: Laurel Evans
Subject: Yard Buildings

https://designit.menards.com/YardBuilding-v2/#/main/summary/review

Developer Tools

Active Store #: 3197
Show Materials
Counter

Added to GarageEstimateManagementService Queue:	1
Successful GarageEstimateManagementService Attempts:	1
Added to SystemVManagementService Queue:	1
Successful SystemVManagementService Attempts:	1

Donald

Summary BackContinue

Sit tight! We're almost done.

Congratulations on completing your brand new garage design! Below is a full summary of your garage and selections. Please review it before moving on to printing your packet.

Print Design PacketEmail Design

Building Info

Building Location Zip Code:	49685	
Building Type:	Standard Studwall Construction	
Building Width:	10'	
Building Length:	18'	
Building Height:	8'	
Floor Materials:	Concrete (Concrete not included)	
Wall Framing Stud:	2" x 4"	
Roof Framing:	Truss Construction	
Truss Type:	Common	
Roof Pitch:	5/12 Pitch	
Gable Overhang:	2'	
Concrete Block Rows:	1 Row	
Concrete Block Type:	4" Standard	

Wall Info

Siding Material Types:	LP Engineered Wood Siding	
LP Engineered Wood Siding:	Prefinished 3/8 x 8 x 16' Textured Lap Siding (15 Yr Paint Warran	
Accent Material Type:	None	
Wainscot Material Type:	None	
Wall Sheathing:	7/16" OSB (Oriented Strand Board)	
House Wrap:	None	
Gable Vents:	None	
Engineered Wood Corner Trim Color:	Biscayne Blue	

Roof Info

Roof Sheathing:	7/16" OSB (Oriented Strand Board)	
Roofing Material Type:	3-Tab Shingle	
3Tab Roofing:	Owens Corning® Supreme® 25-Year Warranty 3-Tab Shingles (33 Black	
Roof Underlayment:	#15 Felt Roofing Underlayment 3' x 144' (432 sq. ft.)	
Ice and Water Barrier:	None	
Fascia Material Type:	Textured Aluminum Fascia	
Fascia:	6" x 12' Aluminum Rustic Fascia - White	
Soffit Material Type:	Aluminum Soffit	
Soffit:	16" x 12' Aluminum Vented Soffit - White	
Gutter Material Type:	None	
Ridge Vent:	None	
Roof Vents:	None	

Openings

Service Door:	Mastercraft® 36"W x 80"H White Smooth Fiberglass 6-Panel Com	

Additional Options

Ceiling Insulation:	None	
Wall Insulation:	None	
Ceiling Finish:	None	
Wall Finish:	None	
Anchor bolt:	Grip Fast® 1/2" x 10" HDG Anchor Bolt w/ Nut & Washer	
Framing Fasteners:	Grip Fast® 3-1/2" 16D Vinyl-Coated Smooth Shank Sinker Nail - 5	
Sheathing Fasteners:	Grip Fast® 2-1/2" 8D Vinyl-Coated Smooth Shank Sinker Nails	
Roofing/Shingle Fasteners:	Grip Fast® 1-1/4" Electro-Galvanized Coil Roofing Nails -7,200 Co	
Truss Fastener:	FastenMaster® TimberLOK® 5/16" x 6" Hex Drive Black Hex Head Count	

Design Name:	YB Design
Design ID:	319752108778
Estimated Price:	**$5,446.69**

*Today's estimated price, future pricing may go up or down. Tax, labor, and delivery not included.

Show Floor Plan

Full Screen

Reset Scene

Yard Buildings v2.2.0

Design ID: 319752112107
Estimate ID: 66366

MENARDS Design&Buy™ YARD BUILDING

How to purchase at the store

1. Take this packet to any Menards store.
2. Have a building materials team member enter the design number into the Yard Buildings Estimator Search Saved Designs page.
3. Apply the design to System V to create the material list.
4. Take the purchase documents to the register and pay.

How to recall and purchase a saved design at home

1. Go to Menards.com.
2. Select the Yard Buildings Estimator from the Project Center.
3. Select Search Saved Design.
4. Log into your account.
5. Select the saved design to load back into the estimator.
6. Add your Yard Buildings to the cart and purchase.

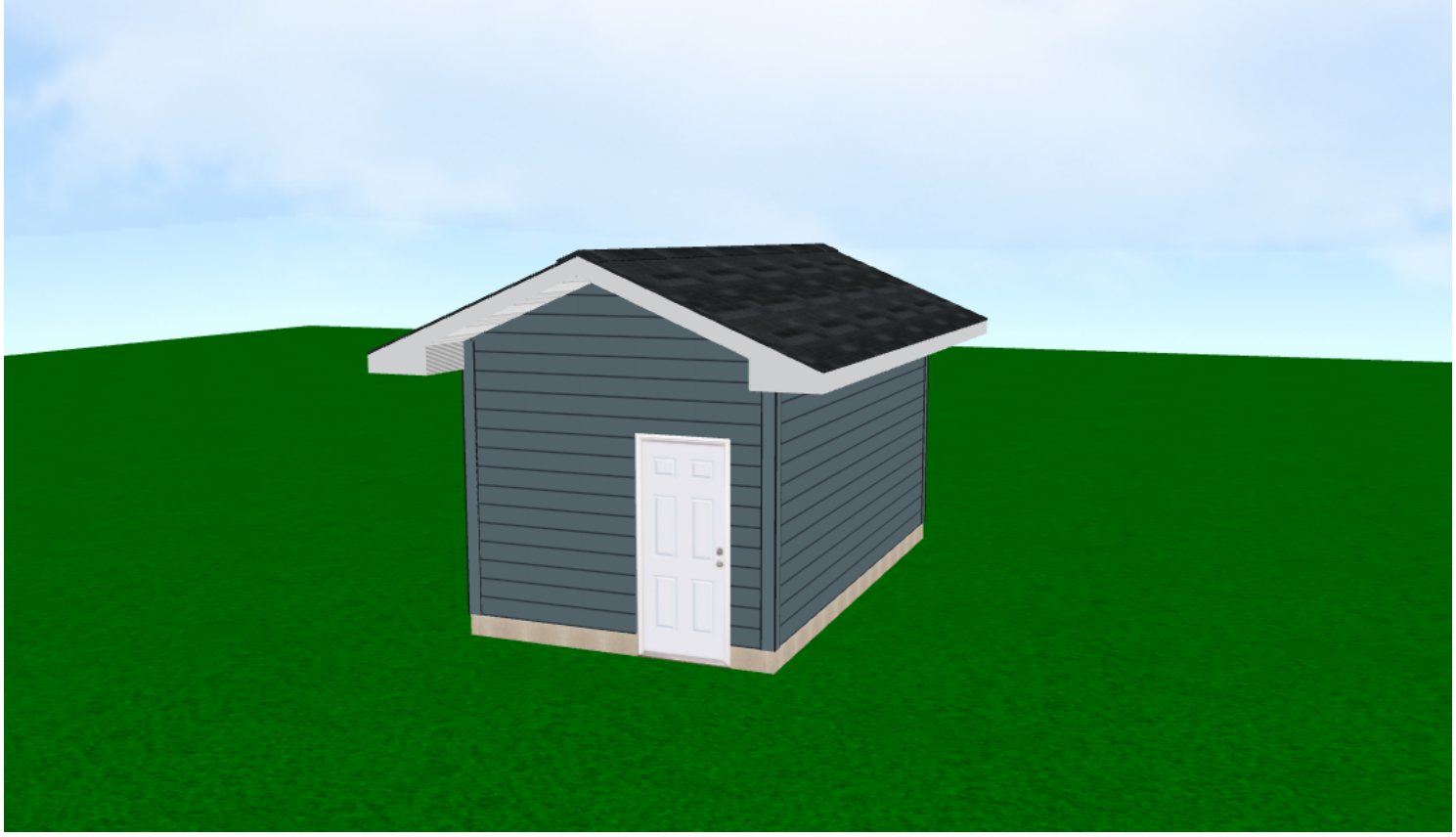

Estimated Price: $5,446.69

* Today's estimated price, future pricing may go up or down. Tax, labor, and delivery not included.

Floor type (concrete, dirt, gravel) is NOT included in estimated price. The floor type is used in the calculation of materials needed. Labor, foundation, steel beams, paint, electrical, heating, plumbing, and delivery are also NOT included in estimated price. This is an estimate. It is only for general price information. This is not an offer and there can be no legally binding contract between the parties based on this estimate. The prices stated herein are subject to change depending upon the market conditions. The prices stated on this estimate are not firm for any time period unless specifically written otherwise on this form. The availability of materials is subject to inventory conditions.

MENARDS IS NOT RESPONSIBLE FOR ANY LOSS INCURRED BY THE GUEST WHO RELIES ON PRICES SET FORTH HEREIN OR ON THE AVAILABILITY OF ANY MATERIALS STATED HEREIN. All information on this form, other than price, has been provided by the guest and Menards is not responsible for any errors in the information on this estimate, including but not limited to quantity, dimension and quality. Please examine this estimate carefully.

MENARDS MAKES NO REPRESENTATIONS, ORAL, WRITTEN OR OTHERWISE THAT THE MATERIALS LISTED ARE SUITABLE FOR ANY PURPOSE BEING CONSIDERED BY THE GUEST. BECAUSE OF WIDE VARIATIONS IN CODES, THERE ARE NO REPRESENTATIONS THAT THE MATERIALS LISTED HEREIN MEET YOUR CODE REQUIREMENTS. THE PLANS AND/OR DESIGNS PROVIDED ARE NOT ENGINEERED. LOCAL CODE OR ZONING REGULATIONS MAY REQUIRE SUCH STRUCTURES TO BE PROFESSIONALLY ENGINEERED AND CERTIFIED PRIOR TO CONSTRUCTION.

Design ID: 319752112107
Estimate ID: 66366

MENARDS Design&Buy™ YARD BUILDING

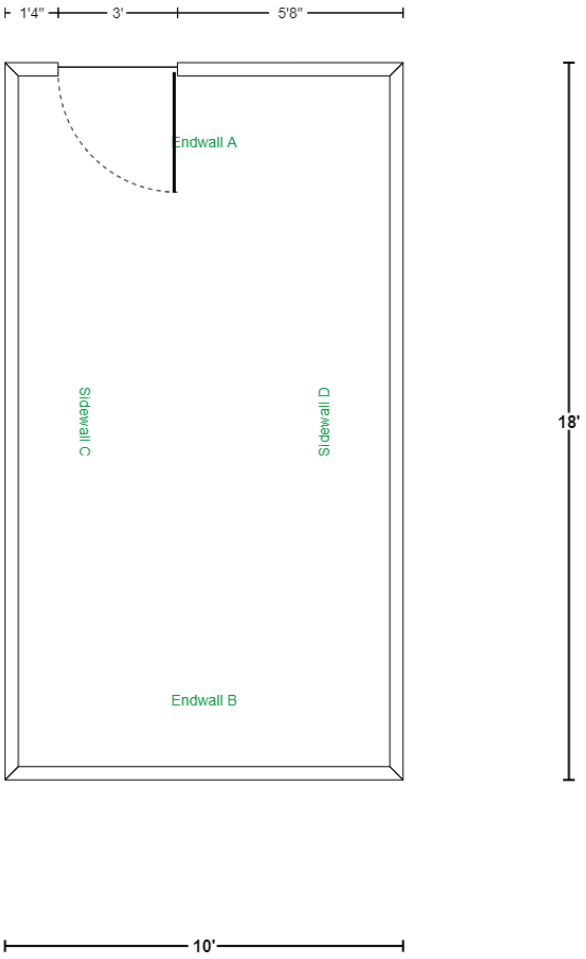

Estimated Price: $5,446.69

* Today's estimated price, future pricing may go up or down. Tax, labor, and delivery not included.

Design ID: 319752112107
Estimate ID: 66366

MENARDS Design&Buy™ YARD BUILDING

Dimensions

Wall Configurations

*Illustration may not depict all options selected.

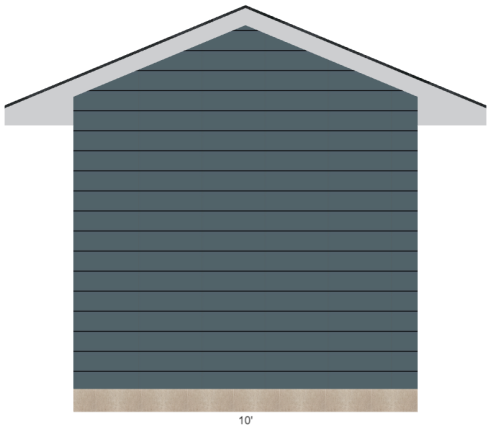

ENDWALL B

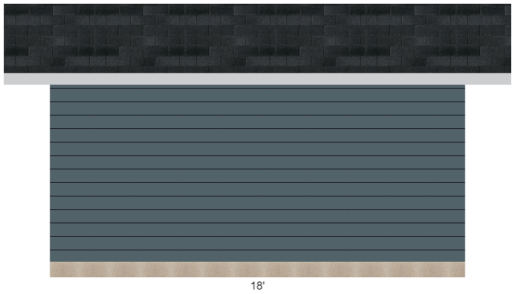

SIDEWALL D

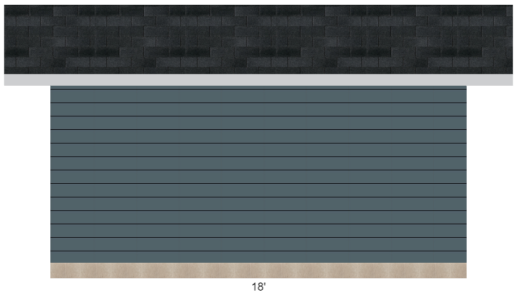

SIDEWALL C

ENDWALL A

Mastercraft® 36"W x 80"H White Smooth Fiberglass 6-Panel Composite Frame

*Some items like wainscot, gutter, gable accents, are not displayed if selected.

Design ID: 319752112107
Estimate ID: 66366

MENARDS Design&Buy™ YARD BUILDING

Materials

Building Info

Building Location Zip Code:	49685
Building Type:	Standard Studwall Construction
Building Width:	10'
Building Length:	18'
Building Height:	8'
Floor Materials:	Concrete (Concrete not included)
Wall Framing Stud:	2" x 4"
Roof Framing:	Truss Construction
Truss Type:	Common
Roof Pitch:	5/12 Pitch
Gable Overhang:	2'
Concrete Block Rows:	1 Row
Concrete Block Type:	4" Standard

Wall Info

Siding Material Types:	LP Engineered Wood Siding
LP Engineered Wood Siding:	Prefinished 3/8 x 8 x 16' Textured Lap Siding (15 Yr Paint Warranty) - Biscayne Blue
Accent Material Type:	None
Wainscot Material Type:	None
Wall Sheathing:	7/16" OSB (Oriented Strand Board)
House Wrap:	None
Gable Vents:	None
Engineered Wood Corner Trim Color:	Biscayne Blue

Design ID: 319752112107
Estimate ID: 66366

MENARDS Design&Buy™ YARD BUILDING

Roof Info

Roof Sheathing:	7/16" OSB (Oriented Strand Board)
Roofing Material Type:	3-Tab Shingle
3Tab Roofing:	Owens Corning® Supreme® 25-Year Warranty 3-Tab Shingles (33.3 sq ft) - Onyx Black
Roof Underlayment:	#15 Felt Roofing Underlayment 3' x 144' (432 sq. ft.)
Ice and Water Barrier:	None
Fascia Material Type:	Textured Aluminum Fascia
Fascia:	6" x 12' Aluminum Rustic Fascia - White
Soffit Material Type:	Aluminum Soffit
Soffit:	16" x 12' Aluminum Vented Soffit - White
Gutter Material Type:	None
Ridge Vent:	None
Roof Vents:	None

Openings

Service Door:	Mastercraft® 36"W x 80"H White Smooth Fiberglass 6-Panel Composite Frame

Additional Options

Ceiling Insulation:	None
Wall Insulation:	None
Ceiling Finish:	None
Wall Finish:	None
Anchor bolt:	Grip Fast® 1/2" x 10" HDG Anchor Bolt w/ Nut & Washer
Framing Fasteners:	Grip Fast® 3-1/2" 16D Vinyl-Coated Smooth Shank Sinker Nail - 5 lb. Box
Sheathing Fasteners:	Grip Fast® 2-1/2" 8D Vinyl-Coated Smooth Shank Sinker Nails
Roofing/Shingle Fasteners:	Grip Fast® 1-1/4" Electro-Galvanized Coil Roofing Nails -7,200 Count
Truss Fastener:	FastenMaster® TimberLOK® 5/16" x 6" Hex Drive Black Hex Head Wood Screw - 50 Count

Design ID: 319752112107
Estimate ID: 66366

MENARDS® Design&Buy™ YARD BUILDING

Job	Truss	Truss Type	Qty	Ply	
QTREC0635827	T1	COMMON	14	1	Job Reference (optional)

Midwest Manufacturing, Eau Claire, WI

Run: 8.32 S Nov 19 2019 Print: 8.320 S Nov 19 2019 MiTek Industries, Inc. Mon Jun 22 11:07:17 Page: 1

ID:VLQRfslaLe49jWfp5UFqxuz3lK4-lt27FNUDC4eewkELc4KvMYbse_63h2WAbtD_E0z3lJ8

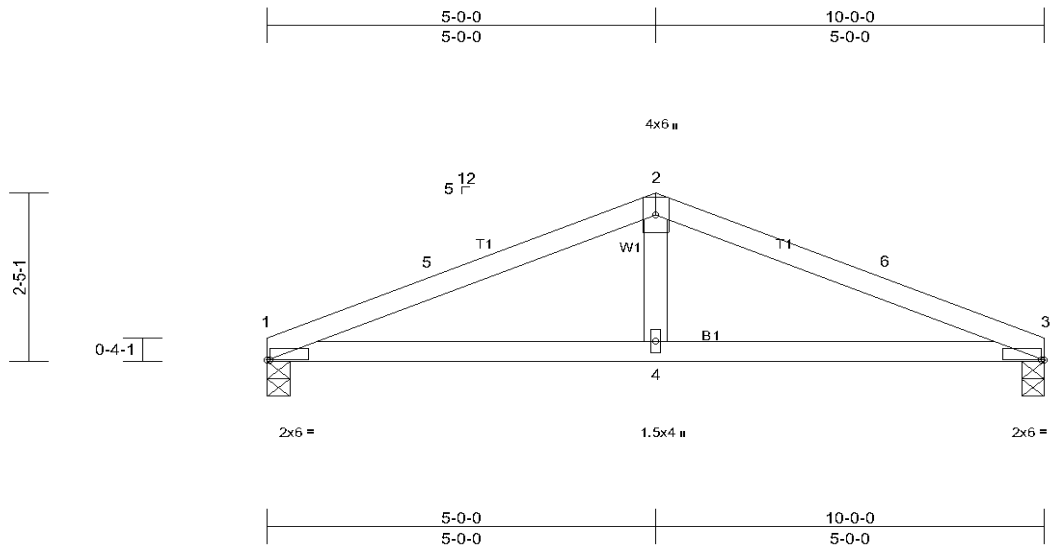

Scale = 1:26.9

Plate Offsets (X, Y): [1:0-0-6,Edge], [3:0-0-6,Edge]

Loading	(psf)	Spacing	2-0-0	CSI		DEFL	in	(loc)	l/defl	L/d	PLATES	GRIP
TCLL (roof)	50.0	Plate Grip DOL	1.15	TC	0.62	Vert(LL)	-0.03	3-4	>999	240	MT20	197/144
Snow (Ps/Pg)	48.5/70.0	Lumber DOL	1.15	BC	0.37	Vert(CT)	-0.05	3-4	>999	180		
TCDL	7.0	Rep Stress Incr	YES	WB	0.09	Horz(CT)	0.01	3	n/a	n/a		
BCLL	0.0 *	Code	IRC2015/TPI2014	Matrix-S								
BCDL	10.0										Weight: 26 lb	FT = 15%

LUMBER
TOP CHORD 2x4 SPF No.2
BOT CHORD 2x4 SPF No.2
WEBS 2x4 SPF Stud

BRACING
TOP CHORD Structural wood sheathing directly applied or 4-6-8 oc purlins.
BOT CHORD Rigid ceiling directly applied or 10-0-0 oc bracing.

MiTek recommends that Stabilizers and required cross bracing be installed during truss erection, in accordance with Stabilizer Installation guide.

REACTIONS (lb/size) 1=636/0-3-8, (min. 0-1-8), 3=636/0-3-8, (min. 0-1-8)
Max Horiz 1=28 (LC 18)
Max Uplift 1=-29 (LC 14), 3=-29 (LC 15)
Max Grav 1=650 (LC 2), 3=650 (LC 2)

FORCES (lb) - Max. Comp./Max. Ten. - All forces 250 (lb) or less except when shown.
TOP CHORD 1-5=-1038/128, 2-5=-936/137, 2-6=-936/137, 3-6=-1038/128
BOT CHORD 1-4=-78/858, 3-4=-78/858

NOTES
1) Unbalanced roof live loads have been considered for this design.
2) Wind: ASCE 7-10; Vult=115mph (3-second gust) Vasd=91mph; TCDL=4.2psf; BCDL=6.0psf; h=25ft; Cat. II; Exp B; Enclosed; MWFRS (envelope) exterior zone and C-C Exterior (2) zone; cantilever left and right exposed ; end vertical left and right exposed;C-C for members and forces & MWFRS for reactions shown; Lumber DOL=1.60 plate grip DOL=1.60
3) TCLL: ASCE 7-10; Pr=50.0 psf (roof live load: Lumber DOL=1.15 Plate DOL=1.15); Pg=70.0 psf (ground snow); Ps=48.5 psf (roof snow: Lumber DOL=1.15 Plate DOL=1.15); Category II; Exp B; Fully Exp.; Ct=1.10
4) Roof design snow load has been reduced to account for slope.
5) Unbalanced snow loads have been considered for this design.
6) This truss has been designed for a 10.0 psf bottom chord live load nonconcurrent with any other live loads.
7) * This truss has been designed for a live load of 20.0psf on the bottom chord in all areas where a rectangle 3-06-00 tall by 2-00-00 wide will fit between the bottom chord and any other members.
8) Provide mechanical connection (by others) of truss to bearing plate capable of withstanding 29 lb uplift at joint 1 and 29 lb uplift at joint 3.
9) This truss is designed in accordance with the 2015 International Residential Code sections R502.11.1 and R802.10.2 and referenced standard ANSI/TPI 1.

LOAD CASE(S) Standard

Design ID: 319752112107
Estimate ID: 66366

MENARDS® Design&Buy™ YARD BUILDING

Job	Truss	Truss Type	Qty	Ply	
QTREC0645090	T1DE	COMMON	2	1	Job Reference (optional)

Midwest Manufacturing, Eau Claire, WI

Run: 8.32 S Nov 19 2019 Print: 8.320 S Nov 19 2019 MiTek Industries, Inc. Tue Aug 18 12:11:14 Page: 1

ID:5CvxAlz8l0Bxg2W9AX2tqBymcxN-kWdUhP6gwiiE6uRSt2FhJjl2Dt58plYka94YxMymcxB

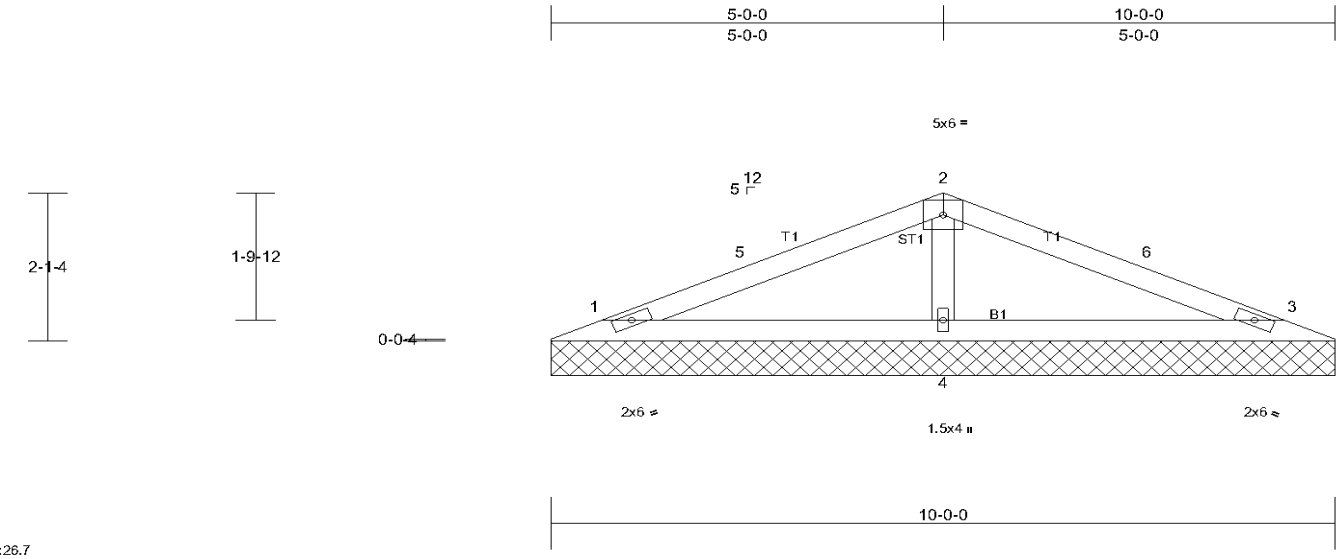

Scale = 1:26.7

Loading	(psf)	Spacing	2-0-0	CSI		DEFL	in	(loc)	l/defl	L/d	PLATES	GRIP
TCLL (roof)	54.0	Plate Grip DOL	1.15	TC	0.48	Vert(LL)	n/a	-	n/a	999	MT20	197/144
Snow (Ps/Pg)	48.5/70.0	Lumber DOL	1.15	BC	0.17	Vert(TL)	n/a	-	n/a	999		
TCDL	10.0	Rep Stress Incr	YES	WB	0.13	Horiz(TL)	0.00	3	n/a	n/a		
BCLL	0.0 *	Code	IRC2015/TPI2014	Matrix-S								
BCDL	10.0										Weight: 24 lb	FT = 15%

LUMBER
TOP CHORD 2x4 SPF No.2
BOT CHORD 2x4 SPF No.2
OTHERS 2x4 SPF Stud

BRACING
TOP CHORD Structural wood sheathing directly applied or 6-0-0 oc purlins.
BOT CHORD Rigid ceiling directly applied or 10-0-0 oc bracing.

MiTek recommends that Stabilizers and required cross bracing be installed during truss erection, in accordance with Stabilizer Installation guide.

REACTIONS (lb/size) 1=267/10-0-0, (min. 0-2-0), 3=267/10-0-0, (min. 0-2-0), 4=651/10-0-0, (min. 0-2-0)
Max Horiz 1=-24 (LC 15)
Max Uplift 1=-23 (LC 14), 3=-27 (LC 15), 4=-7 (LC 14)
Max Grav 1=297 (LC 31), 3=297 (LC 32), 4=702 (LC 2)

FORCES (lb) - Max. Comp./Max. Ten. - All forces 250 (lb) or less except when shown.
WEBS 2-4=-549/119

NOTES
1) Unbalanced roof live loads have been considered for this design.
2) Wind: ASCE 7-10; Vult=115mph (3-second gust) Vasd=91mph; TCDL=4.2psf; BCDL=6.0psf; h=25ft; Cat. II; Exp B; Enclosed; MWFRS (envelope) exterior zone and C-C Exterior (2) zone; cantilever left and right exposed ; end vertical left and right exposed;C-C for members and forces & MWFRS for reactions shown; Lumber DOL=1.60 plate grip DOL=1.60
3) Truss designed for wind loads in the plane of the truss only. For studs exposed to wind (normal to the face), see Standard Industry Gable End Details as applicable, or consult qualified building designer as per ANSI/TPI 1.
4) TCLL: ASCE 7-10; Pr=54.0 psf (roof live load: Lumber DOL=1.15 Plate DOL=1.15); Pg=70.0 psf (ground snow); Ps=48.5 psf (roof snow: Lumber DOL=1.15 Plate DOL=1.15); Category II; Exp B; Fully Exp.; Ct=1.10
5) Roof design snow load has been reduced to account for slope.
6) Unbalanced snow loads have been considered for this design.
7) Gable requires continuous bottom chord bearing.
8) Gable studs spaced at 2-0-0 oc.
9) This truss has been designed for a 10.0 psf bottom chord live load nonconcurrent with any other live loads.
10) * This truss has been designed for a live load of 20.0psf on the bottom chord in all areas where a rectangle 3-06-00 tall by 2-00-00 wide will fit between the bottom chord and any other members.
11) Provide mechanical connection (by others) of truss to bearing plate capable of withstanding 23 lb uplift at joint 1, 27 lb uplift at joint 3 and 7 lb uplift at joint 4.
12) This truss is designed in accordance with the 2015 International Residential Code sections R502.11.1 and R802.10.2 and referenced standard ANSI/TPI 1.

LOAD CASE(S) Standard

Aerial Photo - Spring, 2021

This map is prepared by Leelanau County for reference purposes only. Leelanau County is not liable for any errors that may be found herein.

RHerman_01.07.2022