LELAND DAM INSPECTION

Dam Identification No.: 510
Hazard Potential: High
NE Quarter of Section 9, T. 30 N. – R.12 W
Leelanau County, Michigan
Lake Leelanau

Per Part 307/315, Act 451 of 1994

PREPARED FOR:

Leelanau County Drain Commissioner
Steven R. Christensen
8527 E. Government Center Drive
Suttons Bay, MI 49682
231-256-9783
schristensen@co.leelanau.mi.us

PREPARED BY:

Spicer Group, Inc.

Inspected By:

Shawn P. Middleton, P.E. #42722

Richard D Kathrens, P.E. #43892

Date of Inspection: September 30, 2019
Date of Report: September 2020

Project I.D. Number 127615SG2019

TABLE OF CONTENTS

Introduction....2

Conclusions and Recommendations....3
Overall Condition....3
Observed Deficiencies and Recommendations....3
Further Detailed Studies and/or Investigations....5
Hazard Potential Classification....5

Project Information....6
General Description of Dam....6
Purpose of Dam....7
Available Design, Construction and Maintenance Information....7
Previous Inspection Reports....7

Field Inspection....8

Structural Stability....9

Hydrology and Hydraulics....10
Available Design Data and Hydrologic Design Data....10
Contributing Drainage Area....10
Design Flood Volume Determination....10
Existing Spillway Capacity....10
Routing of Spillway Design Flood....11
Flood of Record....11

Operation and Maintenance....11
Emergency Action Plan....11

Appendix A
Site Location Map
EGLE Dam Inventory Database – Dam ID No. 510
Appendix B
EGLE Hydrologic Information
Spillway Rating Curve Tables and Graphs
Appendix C
2005 Dam Repair / Modification Drawings (Owner Review Set Dated 04/01/2005)
Appendix D
Photographs
Maintenance Log (Included in Photographs)
Appendix E
2019 Underwater Inspection Report – Great Lakes Engineering
2012 Inspection Report
2018 Structural Letter Report

INTRODUCTION

The Leland Dam was inspected pursuant to the requirements of Parts 307 and 315, Dam Safety, Natural Resources and Environmental Protection Act, Act 451 of 1994. Spicer Group, Inc. conducted the three-year inspection of the dam on September 30, 2019 as requested by the owner of the dam, the Leelanau County Drain Commissioner. The scope of this inspection is to identify conditions that constitute an existing or potential hazard to the dam. The identification of potential hazards is limited to the visual field inspection, review of previous reports, previous plans, and general computations. The contents of this report are not to be treated as a detailed engineering evaluation.

This inspection report will serve as a supplement to previous inspections performed on the dam. Previous inspection reports, drawings, sketches, calculations, etc. will be referred to as part of this inspection report. A summary of the design, construction, maintenance, and subsequent inspections of the dam are outlined in the Project Information section of this report. All references regarding the orientation of the dam shall be made as viewed looking downstream. The terms satisfactory, fair, poor, and unsatisfactory will be used to describe the conditions of the dam. The following is a brief definition of each term.

SATISFACTORY

No existing or potential dam safety deficiencies are recognized. Acceptable performance is expected under all loading conditions (static, hydrologic, seismic) in accordance with the applicable regulatory criteria or tolerable risk guidelines.

FAIR

No existing dam safety deficiencies are recognized for normal loading conditions. Rare or extreme hydrologic and /or seismic events may result in a dam safety deficiency. Risk may be in the range to take further action.

POOR

Dam safety deficiency is recognized for loading conditions which may realistically occur. Remedial action is necessary. Poor may also be used when uncertainties exist as to critical analysis parameters which identify a potential dam safety deficiency: further investigations and studies are necessary.

UNSATISFACTORY

Dam safety deficiency is recognized that requires immediate or emergency remedial action for problem resolution. Reservoir restrictions may be necessary until problem resolution.

CONCLUSIONS AND RECOMMENDATIONS

A. *Overall Condition*

Visual inspection of the dam and the results of an underwater inspection indicates that the dam and its appurtenant structures are in satisfactory overall condition. The dam is well maintained and operates to maintain the level of Lake Leelanau in an efficient and effective manner. The spillway appears to be in satisfactory condition and has adequate capacity for passing the design storm. The following is a list of observed deficiencies and recommendations.

B. *Observed Deficiencies and Recommendations*

1. *Observation:* Downstream left abutment wall foundation. Dive inspection observed deep spalling, deteriorated concrete, and exposed rebar below spillway overhang at the downstream end of the left abutment wall. Please refer to the 2019 underwater inspection report in Appendix E for more detail.
   Recommendation: Continue to monitor the abutment wall foundation for a change in condition. A repair to this deteriorated concrete such as underpinning, steel sheeting, tremie concrete work, etc. should be designed for permitting and construction purposes. If no work is proposed or completed, another dive inspection should be considered for comparative purposes in five years, or sooner if observed deterioration of the abutment wall foundation worsens.

2. *Observation:* Downstream edge of spillway apron, downstream cutoff wall and pier foundations. Underwater dive inspection observed deterioration of the concrete at the downstream edge of the spillway and some localized deterioration of the downstream concrete cutoff wall and pier foundation walls. Please refer to the 2019 underwater inspection report in Appendix E for more detail.
   Recommendation: Continue to monitor this spillway and cutoff wall for a change in condition. A repair to this deteriorated concrete such as underpinning, steel sheeting, tremie concrete work, riprap etc. should be designed for permitting and construction purposes. If no work is proposed or completed, another dive inspection should be considered for comparative purposes in five years, or sooner if observed deterioration of the spillway worsens.

3. *Observation:* Upstream left wooden retaining/abutment wall. The dive inspection observed that the steel sheet piling abutment wall immediately upstream of the concrete abutment wall was in satisfactory condition. The wooden retaining/abutment wall upstream of the steel sheeting was in fair condition with some splitting of the wood planks. Settling of the soil behind this wall has occurred and was observed during the dive and visual above ground inspections.
   Recommendation: Continue to monitor this wooden retaining wall for a change in condition. Though not part of the dam this timber retaining wall is in close proximity to the dam and should continue to be monitored. A repair to this deteriorated concrete such as steel sheeting, concrete walls, etc. may be considered if future work to the other portions of the dam are proposed. If no work is proposed or completed, another dive inspection should be considered for comparative purposes in five years or sooner if deterioration of the wall is worsening based on visual inspection.

4. *Observation:* High Lake Michigan water levels have resulted in back flooding of the hydraulic/control room and lower portion of the former Bay #4 spillway.
   Recommendation: Install a temporary or permanent means to prevent this backflow, such as removable watertight stoplogs, low floodproofing gates, concrete curb etc. A means to pump out this area will also need to be in place to dewater when the river is too high to allow for draining by gravity.

5. *Observation:* Mechanical, hydraulic, and electric components of dam. These components are all in satisfactory structural and operational condition.
   Recommendation: Continue to perform routine inspection and maintenance of these components.

C. *Further Detailed Studies and/or Investigations*

We recommend continued observation of the downstream end of the spillway where concrete deterioration has occurred below the waterline under the spillway apron, at the pier foundations, and at the abutment walls. If no work is proposed we recommend a follow up dive inspection within 5 years, or sooner if any further deterioration is observed. This dive inspection could coordinate with the 2025 required triannual dam inspection.

Every three years, inspection by an engineer and periodic inspection by the dam owner is required. Monitoring of the dam by maintenance personnel should occur on at least an annual basis. Specifically, the identified observations noted above should be monitored for changes.

D. *Hazard Potential Classification*

The hazard potential classification of the Leland Dam is currently listed as “high” due to potential property damage and the danger to individuals that exists in the event of failure of the dam. It should be understood that the high hazard potential rating is solely based upon the location of habitable structures downstream of the dam and does not reflect upon the structural integrity of the dam.

PROJECT INFORMATION

A. *General Description of Dam*

Leland Dam is located in the unincorporated community of Leland in the NE Quarter of Section 9, T. 30 N. – R.12 W. of Leelanau County, Michigan (See Site Location Map in Appendix A). The dam is currently owned and operated by the Leelanau County Drain Commissioner. The dam's current purpose is to control the level of Lake Leelanau. The legally established summer level is 589.21 feet and the legally established winter level is 588.21 feet. Lake Leelanau is approximately 8,600 acres in size and consists of a north and south lake connected by a channel referred to as the "The Narrows."

The dam was reconstructed in 2006-2007. The construction included: removal of the timber stoplog spillway bays; removal of the operator's deck, removal of the center spillway bay pier, repair of the left spillway abutment wall, construction of an operations control room in the right spillway bay; installation of an automated, hydraulically controlled crest gate, construction of an auxiliary spillway with aluminum stoplogs in the left spillway bay, and construction of a new operators/access deck. As part of the construction, steel sheet piling was driven to a depth of 15 feet below the spillway slab along the upstream face of the dam and along the right abutment. The sheet piling was installed to provide a coffer dam for construction and to mitigate existing seepage concerns.

The dam configuration at the time of the inspection consisted of the following general components. Please refer to 2012 dam repair/modification drawings in the Appendix.

Earthen Embankment: None

Principal Spillway: A 26'-7" hydraulically driven adjustable weir gate is set in the principal spillway. The crest elevation of this weir can vary between 584.87' (full down position) and 589.2' (full up position). The weir gate is constructed within Bays #2 and #3. The principal spillway upstream approach and downstream raceway are confined by two piers (Pier # 1 and Pier #3) The spillway apron is set an elevation of approximately 582.3'.

Auxiliary Spillway: A 11'-8" clear span fixed crest spillway with removable stoplogs is located in Bay #1. The crest elevation of the fixed concrete portion of the spillway is 587.21'. Four stoplogs were present on the day of the inspection bringing the the weir crest with stoplogs in place to an elevation of 589.21'. The auxiliary spillway upstream approach and downstream raceway are confined by Pier #1 and the spillway structure's left abutment wall. The spillway apron is set an elevation of approximately 582.3'.

The upstream face of the spillway apron is protected by a steel sheetpile cut off wall driven approximately 15' below the spillway apron elevation. The downstream apron overhangs a cutoff wall by approximately 4'. A scour hole is present downstream of the spillway and ranges in depth between 4 and 9 feet.

Hydraulic / Controls Room: Bay #4 was converted to a hydraulic / control room. This room houses the hydraulic rams, torque arms, hydraulic pumps, controls, power, etc. for the automation and operation of the adjustable weir gate.

Operators Access Bridge and Deck: An access walkway is in place over the principal and auxiliary spillway to allow access across the dam and to allow for the safe removal of stoplogs from the auxiliary spillway

B. Purpose of Dam

The Leland Dam was originally constructed in the mid 1800's to provide waterpower to a saw mill. Today the dam serves to maintain the lake level of Lake Leelanau for recreational and development purposes.

C. *Available Design, Construction and Maintenance History Information*

1800's Original Construction – Timber & Earthen structure on the Leland River between Lake Michigan and Lake Leelanau to provide waterpower to a sawmill.

1908 Dam failed.

1909? New concrete dam reconstructed as hydro facility. Owned by Leland Light & Power.

1920's Dam sold to Michigan Public Service Company.

1929 Power generation ceased.

1950 Ownership transferred to Consumers Power Company. Two new stoplog bays installed in place of powerhouse.

1960's Consumer sold dam and adjoining property to Mr. Hollinger. A restaurant was constructed on north side of the dam and a lodge on the north side of dam partially over the top of Bay #4. Dam utilized stoplogs to maintain level of Lake Leelanau.

1977 Inspection of dam performed by Brown and Root of Chicago. Their report recommended replacement of the dam. MDNR concluded the dam was unsafe and should be repaired or abandoned.

1978 Leelanau County Board of Commissioners took over operation of the dam. Legal Lake Level for dam established (Summer = 589.21', Winter = 588.21').

1979 Ayres, Lewis, Norris & May (ALNM) recommends repairs to the dam.

1981 Construction of recommended repairs completed by Tom Shaw Inc. Repairs included pumping grout under spillway aprons, resurfacing of walls and aprons, refurbishing stoplog slots, and new stoplogs.

1982 Triannual inspections of dam & minor repairs to dam (1982-2000), see previous inspection reports.

2003 Dam Inspection performed by Thomas F. Prehoda, P.E. of A. Rieli & Associates, LLC. Report identified concerns with discharge capacity, stoplog operational concerns, and deterioration of structure. Leelanau County Board of Commissioners decided to reconstruct / modify the dam.

2005 Dam Repair/ Improvement Plans prepared by A. Rieli & Associates, LLC, Lake Orion, MI (See plans, Appendix C).

2006 The Leland Dam was reconstructed/modified in 2006-2007. Modifications included: Removal of timber stoplogs and pier between Bays #2 and #3, Bay #1 improvements to stoplogs (aluminum), improve left abutment wall, Bays #2 and #3 were combined into one bay with an automated hydraulically controlled actuated weir, Bay #4 was abandoned and converted to a hydraulic / control room, and installed steel sheet pile cutoff wall at approach slab to 15' below the spillway slab (See plans, Appendix C).

D. *Previous Inspection Reports*

1977 Dam Inspection - Brown and Root, Chicago, IL
1979 Dam Evaluation - Ayres, Lewis, Norris, & May (ALNM), Ann Arbor, MI
1982 Dam Inspection Report - Ayres, Lewis, Norris, & May (ALNM), Ann Arbor, MI
1985 Dam Inspection Report - Gourdie Fraser and Associates, Traverse City, MI
1988 Dam Inspection Report - Leelanau County Board of Commissioners
1991 Dam Inspection Report - Leelanau County Board of Commissioners
1994 Dam Inspection Report - Otwell Mawby, P.C. Traverse City, MI
1997 Dam Inspection Report - Otwell Mawby, P.C. Traverse City, MI
2000 Dam Inspection Report - Otwell Mawby, P.C. Traverse City, MI
2003 Dam Inspection Report - A. Rieli & Associates, LLC, Lake Orion, MI
2009 Dam Inspection Report – James Coughlin, P.E., LLC, Traverse City, MI
2012 Dam Inspection Report – Prehoda Consulting, Highland, MI (Appendix E)
2018 Letter Report - Left abutment wall, Spicer Group Inc. Manistee, MI (Appendix E)
2019 Underwater Dive Inspection – Great Lakes Engineering, Lansing MI (Appendix E)

FIELD INSPECTION

Spicer Group performed a visual inspection of the dam on September 30, 2019, including photo documentation. Photographs are included Appendix D. At the time of inspection, highwater conditions were present on Lake Michigan and high flow conditions were present at the dam. Therefore, the actuated gate was not raised or lowered and an inspection of the back of the gate was not completed at this time. The following is a summary of the visual observations made by Spicer Group, Inc. during the inspection.

Hydraulic Capacity/ Obstruction to Flow

1. At the time of the inspection, highwater conditions were present on Lake Michigan and Lake Leelanau and high flow conditions were occurring on the Leland River.
2. No obstructions or debris were present at the time of the inspection within the spillway or within the approach or downstream channels.
3. No hydraulic limiting conditions were observed at the time of the inspection.

Control Gates and Operating Mechanisms

1. At the time of the inspection, highwater conditions were present on Lake Michigan and Lake Leelanau and high flow conditions were occurring on the Leland River. Due to the conditions, the actuated weir was not raised to the fully upright (closed position).
2. All gates and hydraulic control and operating mechanisms visual at the time of the inspection appeared to be in good working order. The operators of the dam had no specific issues or concerns with operation of the actuated weir.
3. The operating room is susceptible to highwater on Lake Michigan and does flood due to backflow up the former Bay #4 during highwater on Lake Michigan and the Leland River, wind driven flood events, and seiche events. During the inspection minor flooding of the lower portion of Bay #4 was observed but not within the control room.

Stoplogs and Stoplog Channels

1. The aluminum stoplogs in Bay #1 were in good condition with some leaking at the horizontal and vertical stoplog joints / seals. Due to consistent high flows, this leaking is not a concern regarding maintenance of the lake level.
2. Stoplog guides and adjacent concrete were in satisfactory condition.

Concrete and Masonry Structure

1. Visual observation of the concrete surfaces determined all above water concrete to be in satisfactory condition. No significant cracking, spalling, or seepage was observed.
2. Most of the concrete was replaced or surface repairs were made during the 2006 construction project and is in satisfactory condition.
3. The upstream left abutment wall, upstream of the catwalk is older concrete with a steel sheet pile face. This concrete and steel sheeting, though older, is in satisfactory condition.
4. The downstream end of spillway bay aprons consists of an overhang with supporting pier and abutment walls. Deterioration of the below-water concrete at the edge of the spillway and deterioration of the concrete abutment wall below the water were previously observed and reported on in 2018.
5. A dive inspection was recommended in the 2018 report and completed in 2019 by Great Lakes Engineering. The dive inspection report is included in the appendices of this report and videos taken during the dive inspection are on file with Great Lakes Engineering, Spicer Group, Inc. and the Drain office. This inspection revealed concrete spalling, deterioration, erosion at the end of the spillway and beneath the spillway overhang at the abutment walls and pier foundations. Please refer to the underwater dive inspection in the appendix of this report.

Approach Channel, Downstream Channel, Abutment Walls

1. The approach channel is free of debris.
2. The right abutment wall beyond the limits of the dam is steel sheet piling and appears to be in satisfactory condition. The dive inspection indicated the same.
3. The left abutment wall beyond the upstream limits of the concrete wall changes to a wooden retaining/seawall. Though still intact, settling has occurred behind this wooden wall and the underwater inspection revealed vertical cracking of this wooden wall.
4. The downstream channel is free of major debris. The channel bottom is partially armored with riprap, broken concrete, etc.
5. The river channel banks downstream of the concrete structures consist of wooden retaining walls varying in condition from poor to satisfactory. The underwater inspection did look at portions of these downstream walls. Though not part of the dam structure these walls should continue to be monitored due to their close proximity to the structure spillways.

STRUCTURAL STABILITY

Based on this visual inspection, the overall structural stability of the dam is satisfactory and does not appear to be at risk of immediate failure. The spillways and outlet channel are also in satisfactory condition. Repairs to underwater portions of the lower spillway apron should be addressed but are not an immediate concern to the structural stability of the dam.

HYDROLOGY AND HYDRAULICS

A. *Available Design Data and Hydrologic Design Data*

Hydrologic Information provided by the EGLE has been obtained and is included Appendix B of this report. EGLE's hydrologic studies unit provided the following flood flows at the Leland Dam. The Design Discharge for the dam is 0.5% annual chance or 200-year recurrence interval flood event.

50% Annual Chance	2-Year Recurrence Interval	470 CFS
20% Annual Chance	5-Year Recurrence Interval	650 CFS
10% Annual Chance	10-Year Recurrence Interval	750 CFS
4% Annual Chance	25-Year Recurrence Interval	900 CFS
2% Annual Chance	50-Year Recurrence Interval	1,000 CFS
1% Annual Chance	100-Year Recurrence Interval	1,100 CFS
0.5% Annual Chance	**200-Year Recurrence Interval**	**1,200 CFS**
0.2% Annual Chance	500-Year Recurrence Interval	1,300 CFS

B. *Contributing Drainage Area*

The area contributing to the Leland Dam is 140 square miles (89,600 acres). The ratio of contributing drainage area to the surface area of Lake Leelanau (8,600 acres) is approximately 10 to 1. This relatively low ratio of drainage area to impoundment size indicates the lake does provide some storage capacity and the ability to attenuate inflows into the lake reducing peak flows at the outlet.

C. *Design Flood Determination*

The design flood is determined by the EGLE classification of the dam. High hazard dams are required to convey the 200 year event, or ½ Probable Maximum Flood, depending on whether the distance from the 200-yr event elevation to the downstream toe is less than or greater than

40 feet. If the maximum observed event is greater, it must be used as the design flood. The EGLE determined the 200 year peak inflow to be 1,200 CFS. The maximum observed flow was not known at the time of the inspection.

D. Existing Spillway Capacity

A review of the previously completed hydraulic analysis of the Leland Dam was completed as part of this inspection and rating curves were developed for varying conditions at the dam. The following hydraulic control element conditions were analyzed, and rating curves developed for them. Please refer to Appendix B for detailed rating curve tables and summary graphs.

	Adjustable Weir Position (Bays #2 & #3)	Fixed Crest/Stoplog bay Condition Bay #1	Hydraulic Capacity of Spillway at Stage = 591.5', Top of Piers (1.5' of Freeboard below top of Abutment Walls
Maximum Capacity of Spillway	Minimum Position Crest = 584.87'	No logs in Place Crest = 587.21'	1,670 CFS
Minimum Capacity of Spillway	Maximum Position Crest = 589.21'	4 Logs in Place Crest = 589.21'	410 CFS
Maximum Capacity with 4 stoplogs in place	Minimum Position Crest = 584.87'	4 Logs in Place Crest = 589.21'	1,490 CFS
Required weir position with 4 stoplogs in place to pass design flood	Adjustable Weir Position = 585.8'	4 Logs in Place Crest = 589.21'	1,220 CFS

E. *Routing of Spillway Design Flood*

The Leland dam spillway structure is capable of passing the design flood flow provided by EGLE with freeboard. We are not sure if the flows provided were based on outflows after routing through Lake Leelanau or were the cumulative inflow into Lake Leelanau prior to routing. However, since the dam has the capacity to convey the design flows as provided, level pool routing calculations were not performed as part of this inspection report to determine the routed outflows at the dam.

F. *Flood of Record*

We are not aware of the flood of record flows at the time of this inspection.

OPERATION AND MAINTENANCE

The Leelanau County Drain Commissioner is currently responsible for maintenance and operation of the dam. This type of dam does not require a full or part time operator; however, an operation and maintenance plan checklist has been developed to guide and assist in the operation and maintenance performed on the dam. A photographic copy of this operation and maintenance log has been included in the appendix of this report.

EMERGENCY ACTION PLAN

It is our understanding there is an Emergency Action Plan (EAP) on file with the Leelanau County Drain office and Emergency Services. In conjunction with this report, the Notification Call List should be reviewed and updated to ensure names and phone numbers are correct. Because of the high hazard classification of this dam, an EAP is required by Part 315, Dam Safety, Natural Resources and Environmental Protection Act, Act 451 of 1994.

APPENDIX A

SITE LOCATION MAP
EGLE DAM INVENTORY DATABASE – DAM ID No. 510

Leland Dam
Dam ID No. 510
22

Dam ID	510	**National ID**	MI00510	**County**	Leelanau	**County #**	45

Dam Name Leland Dam **File** Yes **State** Michigan

Popular Name Lake Leelanau Dam **Plan** Yes

Pond Name Lake Leelanau **Quad** J19SE

Print Record

1/4 Section NE **Sec** 9 **Town** 30N **Range** 12W **DEQ District** Cadillac

City Leland **Distance (mi)** 0 **Population** 400

Additional Information DC called on 3/18/12 to report that inspection was done in 2012 but engineer (Tom Prehoda) has not provided him with a report yet. He wil endeavor to get it and pass it along. BL

1 plan files **Phase I (PL92-367) Inspection** No

1 Inspection Report | **0 Emergency Action Plans** | **Correspondence (4 Files)**

EAP Yes **EAP Last Updated** **Jurisdiction** Leelanau County

Hazard High **Compliance Activity** Active

Owner ID 1549 **Owner** Leelanau County Drain Commissioner **Owner Type** Private

Authority Part 307/Part 315 **Del. Authority** Leelanau County Drain Commissioner

Inspection Date 05/17/2009 **Inspector** James J. Coughlin, P.E.

Close Inventory

Report Date 11/07/2009 **Next Inspection Date** 12/31/2019

Report Received 12/09/2009 **Report Reply Date** 2/2/2010 **Action Requested**

Condition Not Rated **Condition Detail** Other

Year Built 1910 **Type** Conc Earth **Purpose** Retired Hydro

Top Of Dam To Streambed (ft) 19 **Design Flood ElevationTo Streambed (ft)** 19

Head {Headwater - Tailwater At Normal Flow (ft)} 8 **Normal Freeboard (ft)**

Pond Acres At Normal Flow ~~2849~~ 2,600 **Max. Storage (ac-ft)** 86950 **Normal Storage (ac-ft)** 45150

River Tributary to Lake Michigan **Watershed** 28L **Drainage Area (sq. mi)** 130

Design Flood **Design Inflow Discharge (cfs)** 1200

Max. Spillway Capacity (cfs) 4830 **Design Outflow Discharge (cfs)**

Spillway Control Uncontrolled **Spillway Width (ft)** 47 **Crest Length (ft)** 75

Permit No. **Repair Permit No.** **Permit Expiration Date**

DEQ/DNR Construction Approval **Property ID** County

Year Legal Lake Level Established 1978 **Winter Level (ft)** 588.21 **Summer Level (ft)** 589.21

State Assessed No **SCS/NRCS** None

Public Access No **FERC No.** **Latitude** 45.023333

Trout Stream **Installed Capacity (kw-hr)** 0 **Longitude** -85.761667

Lamprey Barrier **Regulatory Agency** Michigan DEQ **Locate in Bing Maps**

Fish Passage No

ArcMap

Private on Federal No

APPENDIX B

EGLE HYDROLOGIC INFORMATION
SPILLWAY RATING CURVE TABLES AND GRAPHS

Lipon, Ellie A.

From: EGLE-wrd-qreq <EGLE-wrd-qreq@michigan.gov>
Sent: Wednesday, September 11, 2019 6:43 PM
To: Lipon, Ellie A.
Subject: RE: flood or low flow discharge request (ContentID - 168812)

We have estimated the flood frequency discharges requested in your email of August 21, 2019 (Process No. 20190529), as follows:

Tributary to Lake Michigan at Leland Dam, Dam ID 510, Section 9, T30N, R12W, Leland Township, Leelanau County, has a drainage area of 140 square miles. The design discharge for this dam is the 0.5% chance (200-year) flood. The 50%, 20%, 10%, 4%, 2%, 1%, 0.5%, and 0.2% chance peak flows are estimated to be 470 cubic feet per second (cfs), 650 cfs, 750 cfs, 900 cfs, 1000 cfs, 1100 cfs, 1200 cfs, and 1300 cfs, respectively. (Watershed Basin No. 28L Platte (Lake)).

Please include a copy of this letter with your inspection report or any subsequent application for permit. These estimates should be confirmed by our office if an application is not submitted within one year. If you have any questions concerning the discharge estimates, please contact Ms. Susan Greiner, Hydrologic Studies and Dam Safety Unit, at 517-284-5579, or by email at: GreinerS@michigan.gov. If you have any questions concerning the hydraulics or the requirements for the dam safety inspection report, please contact Mr. Dan DeVaun of our Dam Safety Program at 989-370-1528, or by email at: DeVaunD@michigan.gov.

-----Original Message-----
From: DoNotReply@michigan.gov <DoNotReply@michigan.gov>
Sent: Wednesday, August 21, 2019 9:02 AM
To: EGLE-wrd-qreq <EGLE-wrd-qreq@michigan.gov>
Cc: ellie.lipon@spicergroup.com
Subject: flood or low flow discharge request (ContentID - 168812)

Requestor: Ellie Lipon
Company: Spicer Group, Inc.
Address: 1400 Zeeb Drive
City: St. Johns
Zip: 48879
Phone: 9892275010
Date: 2019-08-21
F50percent: Yes
F20percent: Yes
F10percent: Yes
F4percent: Yes
F2percent: Yes
F1percent: Yes
F0.5percent: Yes
F0.2percent: Yes
ContactAgency: None Selected
ContactPerson:
Watercourse: Leland Dam
LocalName:

CountyLocation: Leelanau
CityorTownship: Leland
Section: 9
Town: T30N
Range: R12W
Location: Flow request for area tributary to Leland Ram, Dam ID No. 510.
FFR1: Dam

CONFIDENTIALITY: This communication, including attachments, is for the exclusive use of the addressee(s) and may contain proprietary, confidential or privileged information. If you are not the intended recipient, any use, copying, disclosure, or distribution or the taking of any action in reliance upon this information is strictly prohibited. If you are not the intended recipient, please notify the sender immediately and delete this communication and destroy all copies.

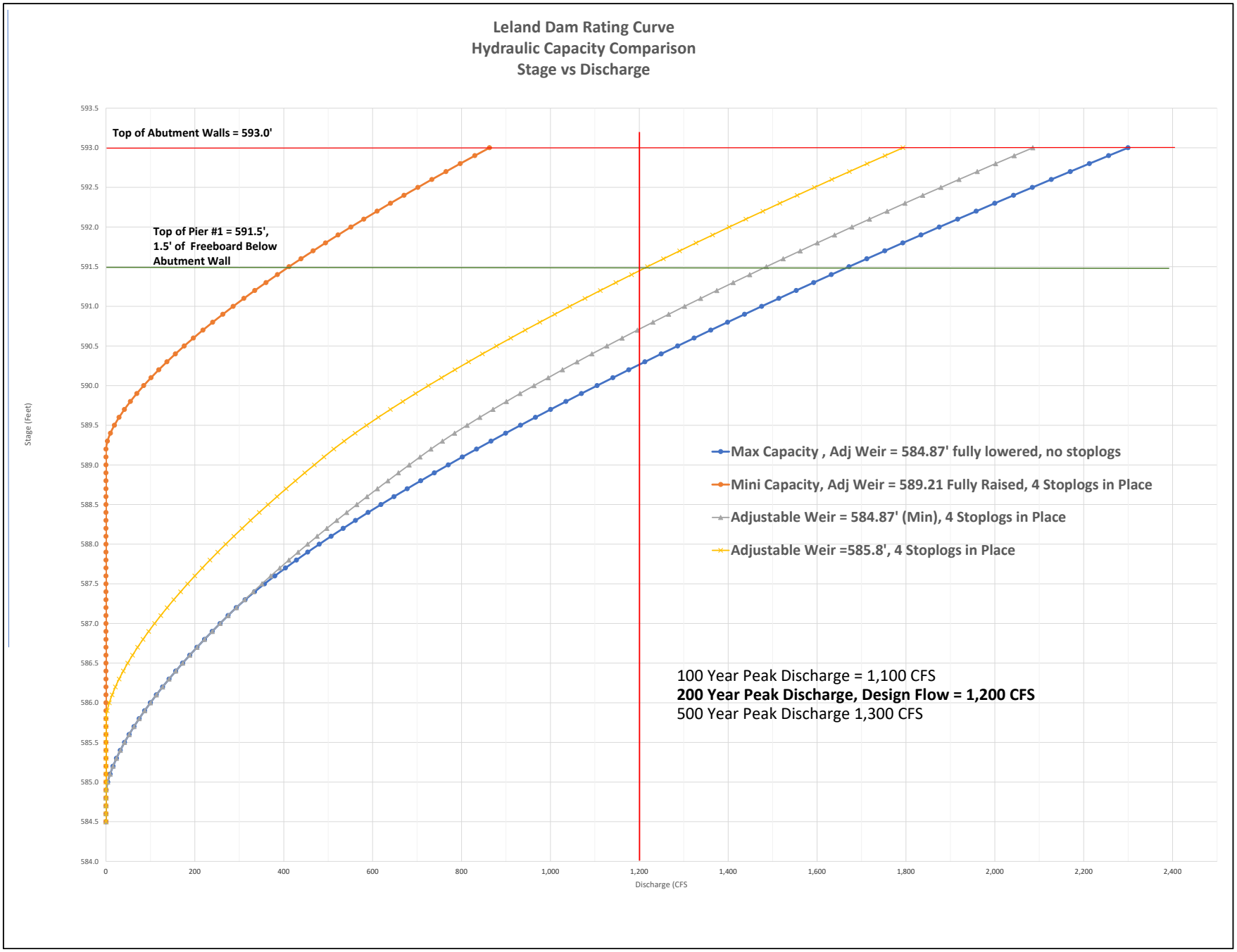
Leland Dam Rating Curve
Hydraulic Capacity Comparison
Stage vs Discharge
Top of Abutment Walls = 593.0'
Top of Pier #1 = 591.5', 1.5' of Freeboard Below Abutment Wall
Max Capacity , Adj Weir = 584.87' fully lowered, no stoplogs
Mini Capacity, Adj Weir = 589.21 Fully Raised, 4 Stoplogs in Place
Adjustable Weir = 584.87' (Min), 4 Stoplogs in Place
Adjustable Weir =585.8', 4 Stoplogs in Place
100 Year Peak Discharge = 1,100 CFS
200 Year Peak Discharge, Design Flow = 1,200 CFS
500 Year Peak Discharge 1,300 CFS
Stage (Feet)
Discharge (CFS
593.5
593.0
592.5
592.0
591.5
591.0
590.5
590.0
589.5
589.0
588.5
588.0
587.5
587.0
586.5
586.0
585.5
585.0
584.5
584.0
0
200
400
600
800
1,000
1,200
1,400
1,600
1,800
2,000
2,200
2,400

Leland Dam

Overall Rating Curve and Individuall Hydraulic Component Rating Curves

9/6/2020

Comments/ Key Elevations

Stage - Area - Volume - Relationship

Lake Leelanau

Drainage Area (Sq Miles):	140
200 Year Peak Discharge Rate (CFS):	1,200
Summer Normal Lake Level (Feet):	589.2
Surface Area at Normal Level-EGLE (Acres):	8,600
Reduction/ Addition in Surface area per 0.1' (Acres):	10.0

Principal Spillway - Adjustable Weir

Weir Equation: $Q = CeL_{eff}H^{1.5}$

$L_{eff} = L - 2(NK_p + K_a)H$

Ce=(H/P)*.4+3.22 (Suppressed Weir, L/B =1) USBR

Bay Number:	2&3	
Clear Length (Feet):	25.8	25.75' Down, 21.33' Up with I Beams
Weir Crest Elev (Feet):	584.87	584.87 Fully Down, 589.21 Fully Up
Weir Coeff. (C):	3.25	C Dependent on P/H, Use 3.25 (2012 Report)
No. of Piers (N):	0	0 Down, 6 Up
Pier Contr. Coeff (K_p):	0.02	
Abut. Contr. Coeff (K_a):	0.1	
P Value:	2.57	
L/B:	1.0	Suppressed Weir

Auxiliary Spillway - Fixed Stoplog Crest

Weir Equation: $Q = CeL_{eff}H^{1.5}$

$L_{eff} = L - 2(NK_p + K_a)H$

Ce=(H/P)*.4+3.22 (Suppressed Weir, L/B =1) USBR

Bay Number:	1	
# of Stop Logs in Place:	0	Each Stoplog = 6 Inches
Sill Elevation (Feet):	587.21	
Clear Length (Feet):	11.7	
Weir Crest Elev (Feet):	587.21	
Weir Coeff. (C):	3.25	C Dependent on P/H, Use 3.25 (2012 Report)
No. of Piers (N):	0.0	
Pier Contr. Coeff (K_p):	0.0	
Abut. Contr. Coeff (K_a):	0.1	
P Value:	4.91	
L/B:	1.0	Suppressed Weir

Overall Rating Curve

Comment/ Hydraulic Elements Datum NAVD88?	Water Elevation Datum? Assume NAVD88 (Feet)	Lake Surface Area (Acres)	Incremental Storage Volume (Ac-Ft)	Estimated Total Storage (Ac-Ft)	Head On Stoplog (Feet)	Effective Weir Length (Feet)	H/P	Calculated Suppressed Weir Ce	Flowrate (CFS)	Head On Stoplog (Feet)	Effective Weir Length (Feet)	H/P	Calculated Suppressed Weir Ce	Flowrate (CFS)	Total Flowrate (CFS)
	584.5	8,130	0	0	0.0	25.8	0.0	3.2	0	0.0	11.7	0.0	3.2	0.0	0
	584.6	8,140	0	0	0.0	25.8	0.0	3.2	0	0.0	11.7	0.0	3.2	0.0	0
	584.7	8,150	0	0	0.0	25.8	0.0	3.2	0	0.0	11.7	0.0	3.2	0.0	0
	584.8	8,160	0	0	0.0	25.8	0.0	3.2	0	0.0	11.7	0.0	3.2	0.0	0
Principal Spillwawy - Adj Weir (Bays 2 & 3) Min Crest Elev = 584.87'	584.9	8,170	0	0	0.0	25.8	0.0	3.2	0	0.0	11.7	0.0	3.2	0.0	0
	585.0	8,180	817.5	818	0.1	25.8	0.1	3.2	4	0.0	11.7	0.0	3.2	0.0	4
	585.1	8,190	818.5	1,636	0.2	25.8	0.1	3.3	9	0.0	11.7	0.0	3.2	0.0	9
	585.2	8,200	819.5	2,455	0.3	25.8	0.1	3.3	16	0.0	11.7	0.0	3.2	0.0	16
	585.3	8,210	820.5	3,276	0.4	25.7	0.2	3.3	24	0.0	11.7	0.0	3.2	0.0	24
	585.4	8,220	821.5	4,098	0.5	25.7	0.2	3.3	32	0.0	11.7	0.0	3.2	0.0	32
	585.5	8,230	822.5	4,920	0.6	25.7	0.2	3.3	42	0.0	11.7	0.0	3.2	0.0	42
	585.6	8,240	823.5	5,744	0.7	25.7	0.3	3.3	52	0.0	11.7	0.0	3.2	0.0	52
	585.7	8,250	824.5	6,568	0.8	25.7	0.3	3.3	63	0.0	11.7	0.0	3.2	0.0	63
	585.8	8,260	825.5	7,393	0.9	25.6	0.4	3.4	75	0.0	11.7	0.0	3.2	0.0	75
	585.9	8,270	826.5	8,220	1.0	25.6	0.4	3.4	87	0.0	11.7	0.0	3.2	0.0	87
	586.0	8,280	827.5	9,048	1.1	25.6	0.4	3.4	100	0.0	11.7	0.0	3.2	0.0	100
	586.1	8,290	828.5	9,876	1.2	25.6	0.5	3.4	113	0.0	11.7	0.0	3.2	0.0	113
	586.2	8,300	829.5	10,705	1.3	25.6	0.5	3.4	127	0.0	11.7	0.0	3.2	0.0	127
	586.3	8,310	830.5	11,536	1.4	25.5	0.6	3.4	142	0.0	11.7	0.0	3.2	0.0	142
	586.4	8,320	831.5	12,368	1.5	25.5	0.6	3.5	157	0.0	11.7	0.0	3.2	0.0	157
	586.5	8,330	832.5	13,200	1.6	25.5	0.6	3.5	173	0.0	11.7	0.0	3.2	0.0	173
	586.6	8,340	833.5	14,034	1.7	25.5	0.7	3.5	188	0.0	11.7	0.0	3.2	0.0	188
	586.7	8,350	834.5	14,868	1.8	25.5	0.7	3.5	205	0.0	11.7	0.0	3.2	0.0	205
	586.8	8,360	835.5	15,703	1.9	25.4	0.8	3.5	222	0.0	11.7	0.0	3.2	0.0	222
	586.9	8,370	836.5	16,540	2.0	25.4	0.8	3.5	239	0.0	11.7	0.0	3.2	0.0	239
	587.0	8,380	837.5	17,378	2.1	25.4	0.8	3.6	257	0.0	11.7	0.0	3.2	0.0	257
	587.1	8,390	838.5	18,216	2.2	25.4	0.9	3.6	275	0.0	11.7	0.0	3.2	0.0	275
Auxiliary Spillway (Bay #1) - Fixed Concrete Weir Crest = 587.2	587.2	8,400	839.5	19,055	2.3	25.4	0.9	3.6	293	0.0	11.7	0.0	3.2	0.0	293
	587.3	8,410	840.5	19,896	2.4	25.3	0.9	3.6	312	0.1	11.6	0.0	3.2	1.0	313
	587.4	8,420	841.5	20,738	2.5	25.3	1.0	3.6	331	0.2	11.6	0.0	3.2	3.1	334
	587.5	8,430	842.5	21,580	2.6	25.3	1.0	3.6	351	0.3	11.6	0.1	3.2	5.9	357
	587.6	8,440	843.5	22,424	2.7	25.3	1.1	3.6	371	0.4	11.6	0.1	3.3	9.2	380
Auxiliary Spillway (Bay #1) - 1 Stoplog in Place Crest = 587.7	587.7	8,450	844.5	23,268	2.8	25.3	1.1	3.7	391	0.5	11.6	0.1	3.3	12.9	404
	587.8	8,460	845.5	24,113	2.9	25.2	1.1	3.7	412	0.6	11.5	0.1	3.3	17.0	429
	587.9	8,470	846.5	24,960	3.0	25.2	1.2	3.7	432	0.7	11.5	0.1	3.3	21.5	454
	588.0	8,480	847.5	25,808	3.1	25.2	1.2	3.7	454	0.8	11.5	0.2	3.3	26.3	480
	588.1	8,490	848.5	26,656	3.2	25.2	1.3	3.7	475	0.9	11.5	0.2	3.3	31.4	507
Auxiliary Spillway (Bay #1) - 2 Stoplogs in Place Crest = 588.2	588.2	8,500	849.5	27,505	3.3	25.2	1.3	3.7	497	1.0	11.5	0.2	3.3	36.7	534
	588.3	8,510	850.5	28,356	3.4	25.1	1.3	3.8	519	1.1	11.4	0.2	3.3	42.3	562
	588.4	8,520	851.5	29,208	3.5	25.1	1.4	3.8	542	1.2	11.4	0.2	3.3	48.2	590
	588.5	8,530	852.5	30,060	3.6	25.1	1.4	3.8	564	1.3	11.4	0.3	3.3	54.3	619
	588.6	8,540	853.5	30,914	3.7	25.1	1.5	3.8	587	1.4	11.4	0.3	3.3	60.7	648
Auxiliary Spillway (Bay #1) - 3 Stoplogs in Place Crest = 588.7	588.7	8,550	854.5	31,768	3.8	25.1	1.5	3.8	611	1.5	11.4	0.3	3.3	67.2	678
	588.8	8,560	855.5	32,623	3.9	25.0	1.5	3.8	634	1.6	11.3	0.3	3.3	73.9	708
	588.9	8,570	856.5	33,480	4.0	25.0	1.6	3.8	658	1.7	11.3	0.3	3.4	80.9	739
	589.0	8,580	857.5	34,338	4.1	25.0	1.6	3.9	682	1.8	11.3	0.4	3.4	88.0	770
Auxiliary Spillway (Bay #1) - 4 Stoplogs in Place Crest = 589.2	589.1	8,590	858.5	35,196	4.2	25.0	1.6	3.9	706	1.9	11.3	0.4	3.4	95.3	802
Summer Level - 589.21'	589.2	**8,600**	859.5	36,056	4.3	25.0	1.7	3.9	731	2.0	11.3	0.4	3.4	102.8	834
Principal Spillwawy - Adj. Weir (Bays 2 & 3) Max Gate Crest El = 589.21'	589.3	8,610	860.5	36,916	4.4	24.9	1.7	3.9	756	2.1	11.2	0.4	3.4	110.5	866
	589.4	8,620	861.5	37,778	4.5	24.9	1.8	3.9	781	2.2	11.2	0.4	3.4	118.3	899
	589.5	8,630	862.5	38,640	4.6	24.9	1.8	3.9	806	2.3	11.2	0.5	3.4	126.2	933
	589.6	8,640	863.5	39,504	4.7	24.9	1.8	4.0	832	2.4	11.2	0.5	3.4	134.4	966
	589.7	8,650	864.5	40,368	4.8	24.9	1.9	4.0	858	2.5	11.2	0.5	3.4	142.6	1,001
	589.8	8,660	865.5	41,234	4.9	24.8	1.9	4.0	884	2.6	11.1	0.5	3.4	151.0	1,035
	589.9	8,670	866.5	42,100	5.0	24.8	2.0	4.0	910	2.7	11.1	0.5	3.4	159.6	1,070
	590.0	8,680	867.5	42,968	5.1	24.8	2.0	4.0	937	2.8	11.1	0.6	3.4	168.2	1,105
	590.1	8,690	868.5	43,836	5.2	24.8	2.0	4.0	964	2.9	11.1	0.6	3.5	177.1	1,141
	590.2	8,700	869.5	44,706	5.3	24.8	2.1	4.0	990	3.0	11.1	0.6	3.5	186.0	1,176
	590.3	8,710	870.5	45,576	5.4	24.7	2.1	4.1	1018	3.1	11.0	0.6	3.5	195.0	1,213
	590.4	8,720	871.5	46,448	5.5	24.7	2.2	4.1	1045	3.2	11.0	0.6	3.5	204.2	1,249
	590.5	8,730	872.5	47,320	5.6	24.7	2.2	4.1	1073	3.3	11.0	0.7	3.5	213.5	1,286
	590.6	8,740	873.5	48,194	5.7	24.7	2.2	4.1	1100	3.4	11.0	0.7	3.5	222.9	1,323
	590.7	8,750	874.5	49,068	5.8	24.7	2.3	4.1	1129	3.5	11.0	0.7	3.5	232.4	1,361
	590.8	8,760	875.5	49,944	5.9	24.6	2.3	4.1	1157	3.6	10.9	0.7	3.5	242.0	1,399
	590.9	8,770	876.5	50,820	6.0	24.6	2.3	4.2	1185	3.7	10.9	0.8	3.5	251.8	1,437
	591.0	8,780	877.5	51,698	6.1	24.6	2.4	4.2	1214	3.8	10.9	0.8	3.5	261.6	1,475
	591.1	8,790	878.5	52,576	6.2	24.6	2.4	4.2	1243	3.9	10.9	0.8	3.5	271.5	1,514
	591.2	8,800	879.5	53,456	6.3	24.6	2.5	4.2	1272	4.0	10.9	0.8	3.5	281.5	1,553
	591.3	8,810	880.5	54,336	6.4	24.5	2.5	4.2	1301	4.1	10.8	0.8	3.6	291.6	1,592
	591.4	8,820	881.5	55,218	6.5	24.5	2.5	4.2	1330	4.2	10.8	0.9	3.6	301.8	1,632
Top of Pier #1, 1.5' Freeboard below Top of Abutment Walls	591.5	8,830	882.5	56,100	6.6	24.5	2.6	4.3	1360	4.3	10.8	0.9	3.6	312.1	1,672
	591.6	8,840	883.5	56,984	6.7	24.5	2.6	4.3	1389	4.4	10.8	0.9	3.6	322.5	1,712
	591.7	8,850	884.5	57,868	6.8	24.5	2.7	4.3	1419	4.5	10.8	0.9	3.6	333.0	1,752
	591.8	8,860	885.5	58,754	6.9	24.4	2.7	4.3	1449	4.6	10.7	0.9	3.6	343.5	1,793
	591.9	8,870	886.5	59,640	7.0	24.4	2.7	4.3	1480	4.7	10.7	1.0	3.6	354.2	1,834
1' of Freeboard below Top of Abutment Walls	592.0	8,880	887.5	60,528	7.1	24.4	2.8	4.3	1510	4.8	10.7	1.0	3.6	364.9	1,875
	592.1	8,890	888.5	61,416	7.2	24.4	2.8	4.3	1541	4.9	10.7	1.0	3.6	375.6	1,916
	592.2	8,900	889.5	62,306	7.3	24.4	2.9	4.4	1572	5.0	10.7	1.0	3.6	386.5	1,958
	592.3	8,910	890.5	63,196	7.4	24.3	2.9	4.4	1603	5.1	10.6	1.0	3.6	397.4	2,000
	592.4	8,920	891.5	64,088	7.5	24.3	2.9	4.4	1634	5.2	10.6	1.1	3.6	408.4	2,042
Estimated Height of Left Upstream Wood SeaWall	592.5	8,930	892.5	64,980	7.6	24.3	3.0	4.4	1665	5.3	10.6	1.1	3.7	419.5	2,084
	592.6	8,940	893.5	65,874	7.7	24.3	3.0	4.4	1696	5.4	10.6	1.1	3.7	430.6	2,127
	592.7	8,950	894.5	66,768	7.8	24.3	3.0	4.4	1728	5.5	10.6	1.1	3.7	441.8	2,170
	592.8	8,960	895.5	67,664	7.9	24.2	3.1	4.5	1760	5.6	10.5	1.1	3.7	453.1	2,213
	592.9	8,970	896.5	68,560	8.0	24.2	3.1	4.5	1792	5.7	10.5	1.2	3.7	464.4	2,256
Top of Abutment Walls	593.0	8,980	897.5	69,458	8.1	24.2	3.2	4.5	1824	5.8	10.5	1.2	3.7	475.8	2,300

APPENDIX C

2005 DAM REPAIR/ MODIFICATION DRAWINGS FOR OWNER REVIEW
(Dated 04/01/2005)

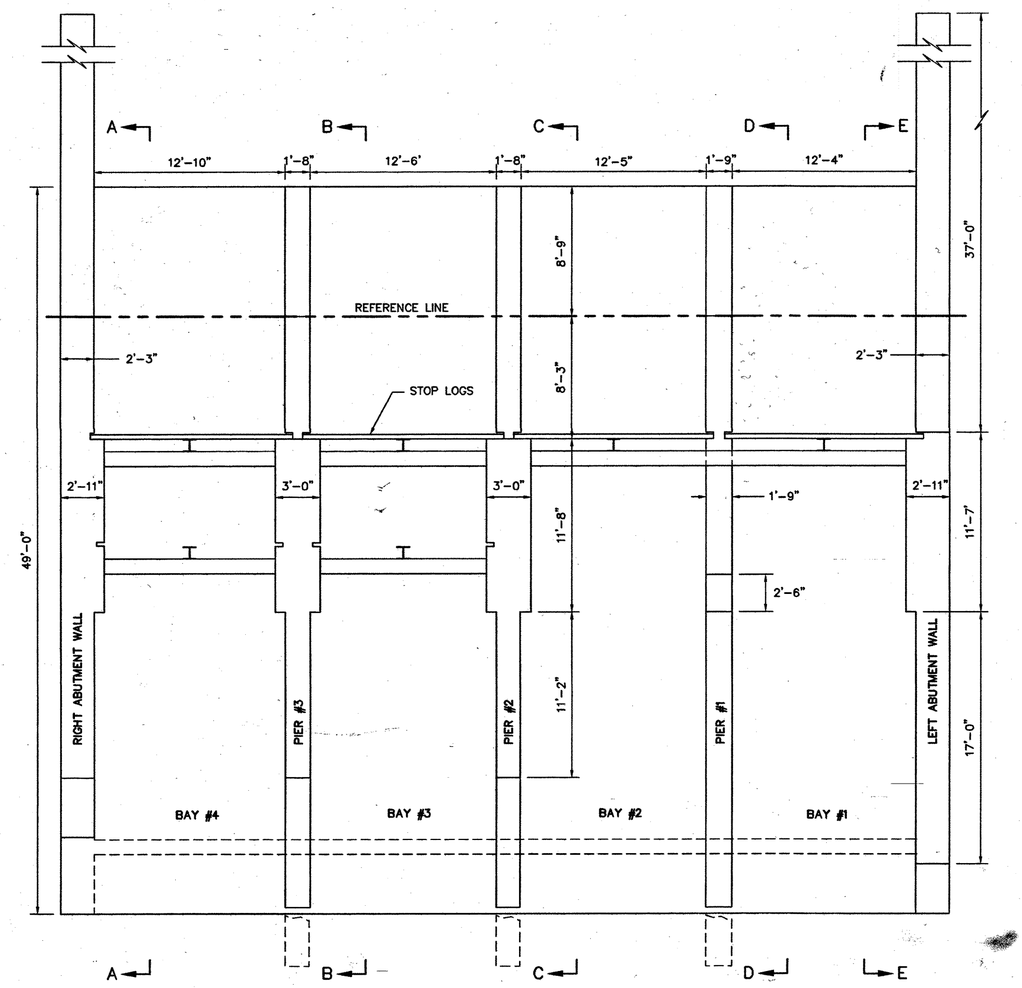

PLAN: LELAND DAM SPILLWAY STRUCTURE (EXISTING)

0 5 10
SCALE IN FEET

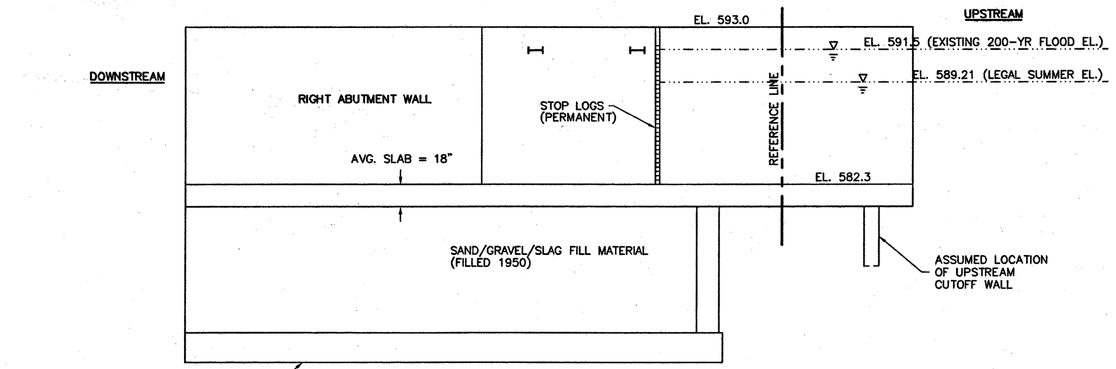

SECTION A–A: RIGHT ABUTMENT

0 5 10
SCALE IN FEET

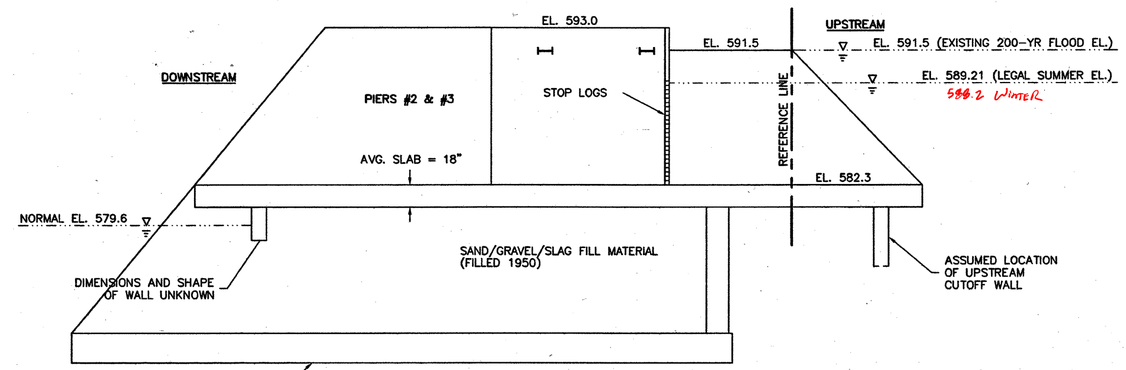

SECTION B–B & C–C: EXISTING PIERS #3 & #2

0 5 10
SCALE IN FEET

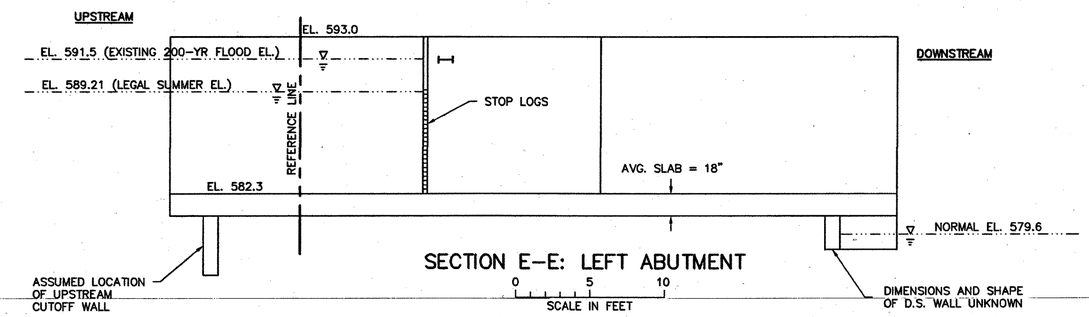

SECTION E–E: LEFT ABUTMENT

0 5 10
SCALE IN FEET

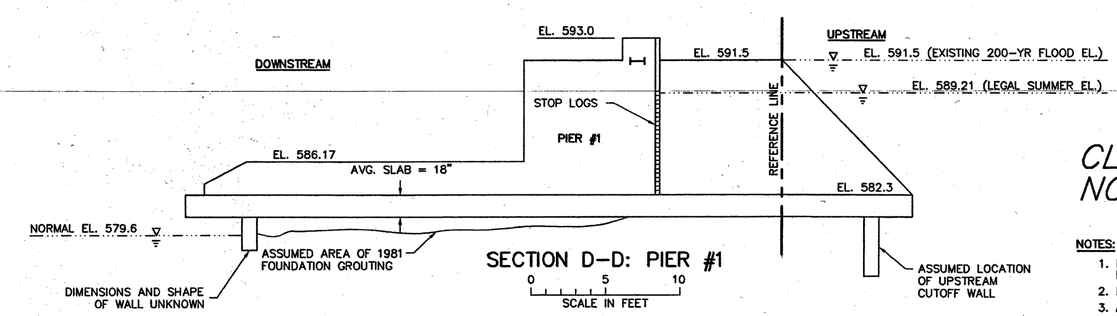

SECTION D–D: PIER #1

0 5 10
SCALE IN FEET

CLIENT REVIEW DRAWING
NOT FOR CONSTRUCTION

NOTES:

1. FISHERMAN'S COVE RESTAURANT EXTENDS OVER BAY #4. NOT SHOWN FOR CLARITY.
2. EXISTING OPERATOR'S/ACCESS BRIDGE NOT SHOWN FOR CLARITY.
3. ALL MEASUREMENTS AND ELEVATIONS MUST BE FIELD VERIFIED.
4. FOUNDATION CONDITIONS AND SOILS UNKNOWN. REPORTS INDICATE THAT EXISTING STRUCTURE IS FOUNDED ON TIMBER PILING.

A. Rieli & Associates, LLC
CONSULTING ENGINEERS
1050 Seneca Road
Lake Orion, MI 48362
Phone/Fax: (248) 693-2217
E-mail: <tfprehodo@sbcglobal.net>

Prepared for:
LEELANAU COUNTY
LELAND, MI

Project:
LELAND DAM REPAIR/MODIFICATION
LELAND, MI

LELAND DAM SPILLWAY STRUCTURE
EXISTING PLAN AND SECTIONS

CLIENT	04/01/05				Scale	AS SHOWN
BID					Date	DATE
CONSTRUCTION					Drawn by	DRAWN
RECORD					Checked by	CHECKED
RELEASED TO/FOR	0	1	2	3	Designed by	DESIGNED
	DATE RELEASED				Approved by	APPROVED

I HEREBY CERTIFY THAT THIS DRAWING WAS PREPARED BY ME OR UNDER MY DIRECT SUPERVISION AND THAT I AM A DULY REGISTERED PROFESSIONAL ENGINEER UNDER THE LAWS OF THE STATE OF MICHIGAN.

DATE _____ REG. NO. _____

CLIENT PROJECT No.	DWG. No.	REV. No.
PROJECT #	S-01	REV.

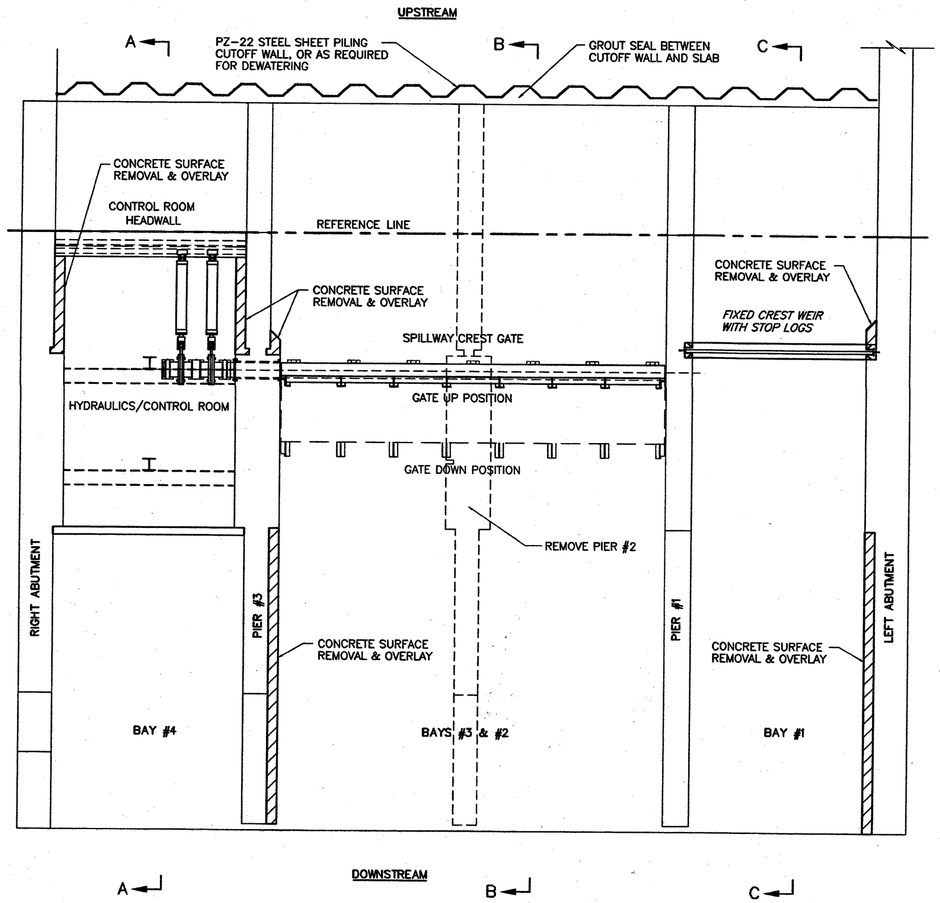

PLAN: REPAIRED/MODIFIED SPILLWAY STRUCTURE

0 5 10
SCALE IN FEET

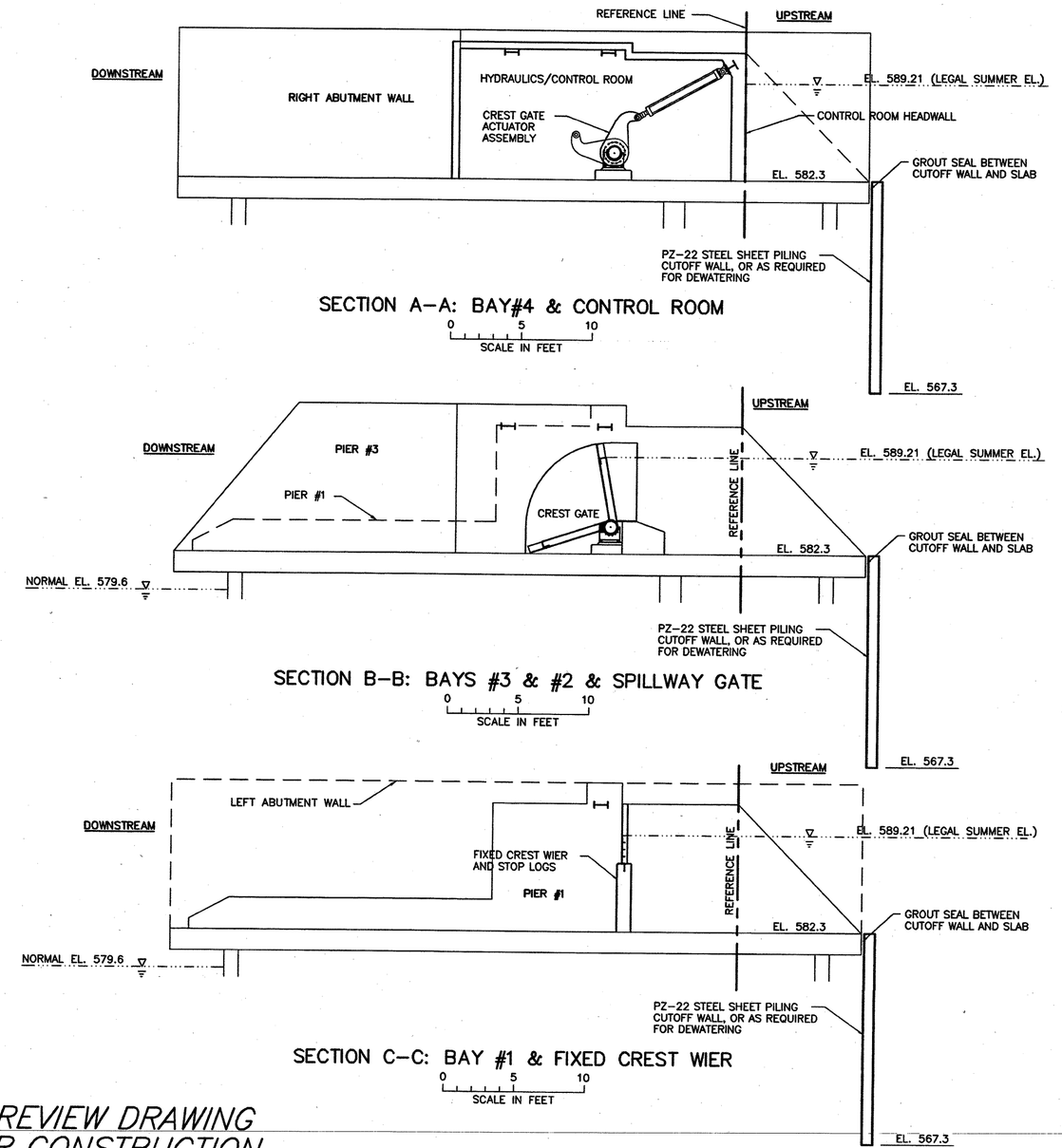

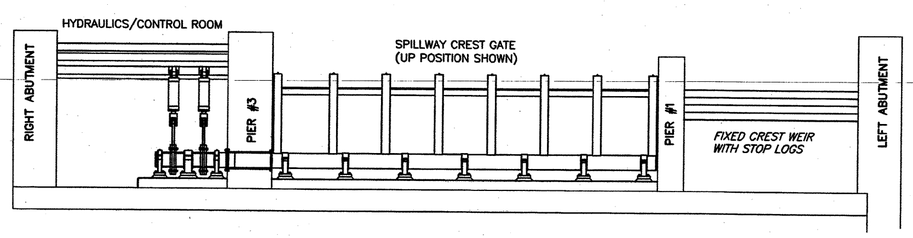

ELEVATION: REPAIRED/MODIFIED SPILLWAY STRUCTURE

0 5 10
SCALE IN FEET

CLIENT REVIEW DRAWING
NOT FOR CONSTRUCTION

NOTES:

1. CONCRETE SURFACE REMOVAL/REPAIR REQUIRED ON ALL EXPOSED & NON-SUBMERGED AREAS IN BAYS #1, #2, & #3 EXCEPT FOR AREAS DESIGNATED FOR SURFACE REMOVAL AND OVERLAY.
2. CONCRETE SURFACE REMOVAL/REPAIR REQUIRED ON BAY #4 FLOOR SLAB.
3. PIER #2 TO BE REMOVED IN ENTIRETY.
4. EXISTING STOP LOGS AND APPURTANCES TO BE REMOVED IN ENTIRETY.
5. EXISTING STEEL BEAMS AND COLUMNS IN BAYS # 1, #2, & #3 TO BE REMOVED IN ENTIRETY.
6. EXISTING STEEL COLUMNS IN BAY #4 TO BE REMOVED IN ENTIRETY.
7. NEW OPERATOR'S/ACCESS BRIDGE NOT SHOWN FOR CLARITY.
8. ALL HOLES IN SPILLWAY SLAB TO BE FILLED ENTIRELY AS PART OF SURFACE REMOVAL/REPAIR.

A. Rieli & Associates, LLC
CONSULTING ENGINEERS
1050 Seneca Road
Lake Orion, MI 48362
Phone/Fax: (248) 693-2217
E-mail: <tfprehoda@sbcglobal.net>

Prepared for:
LEELANAU COUNTY
LELAND, MI

Project:
LELAND DAM REPAIR/MODIFICATION
LELAND, MI

REPAIRED/MODIFIED SPILLWAY STRUCTURE
PLAN, ELEVATION & SECTIONS

CLIENT	04/01/05				Scale	SCALE
BID					Date	DATE
CONSTRUCTION					Drawn by	DRAWN
RECORD					Checked by	CHECKED
RELEASED TO/FOR	0	1	2	3	Designed by	DESIGNED
	DATE RELEASED				Approved by	APPROVED

I HEREBY CERTIFY THAT THIS DRAWING WAS PREPARED BY ME OR UNDER MY DIRECT SUPERVISION AND THAT I AM A DULY REGISTERED PROFESSIONAL ENGINEER UNDER THE LAWS OF THE STATE OF MICHIGAN.

DATE _____ REG. NO. _____

CLIENT PROJECT No.	DWG. No.	REV. No.
PROJECT #	S-02	REV.

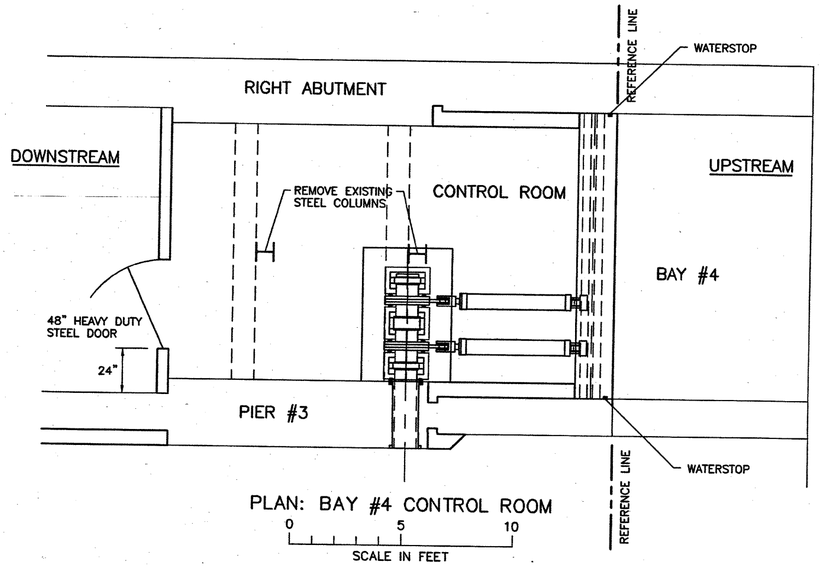

PLAN: BAY #4 CONTROL ROOM

0 5 10
SCALE IN FEET

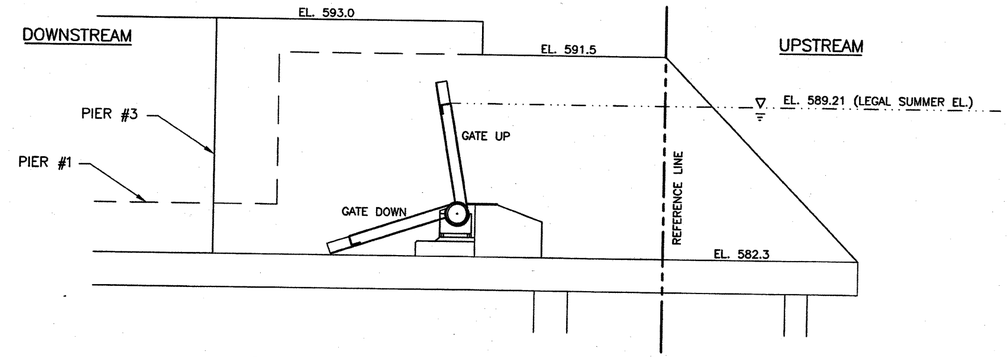

SECTION: BAYS #2 & 3 CREST GATE SPILLWAY

0 5 10
SCALE IN FEET

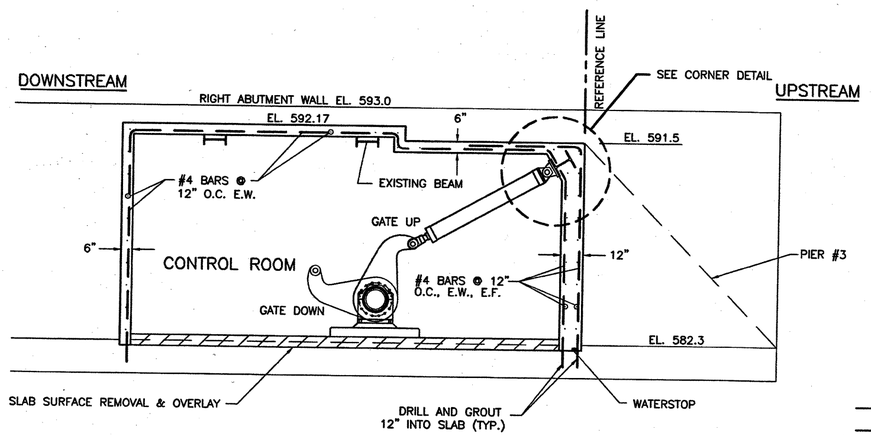

SECTION: BAY #4 CONTROL ROOM

0 5 10
SCALE IN FEET

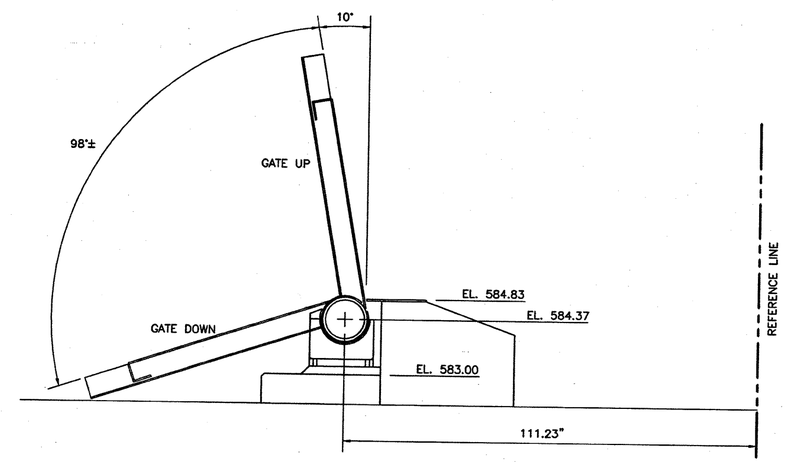

DETAIL: SPILLWAY CREST GATE

0 1 2 3 4
SCALE IN FEET

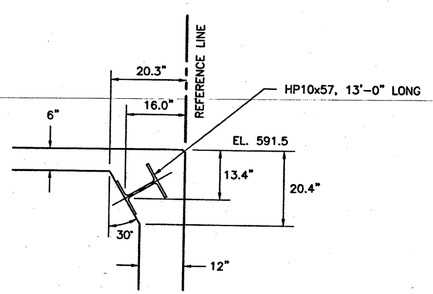

DETAIL: CORNER

0 1 2 3 4
SCALE IN FEET

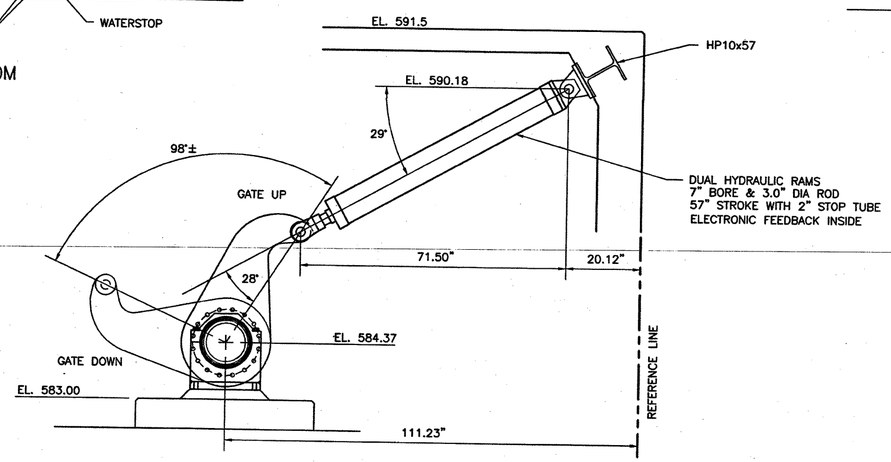

DETAIL: GATE ACTUATOR

0 1 2 3 4
SCALE IN FEET

CLIENT REVIEW DRAWING
NOT FOR CONSTRUCTION

A. Rieli & Associates, LLC
CONSULTING ENGINEERS
1050 Seneca Road
Lake Orion, MI 48362
Phone/Fax: (248) 693-2217
E-mail: <tfprehoda@sbcglobal.net>

Prepared for:
LEELANAU COUNTY
LELAND, MI

Project:
LELAND DAM REPAIR/MODIFICATION
LELAND, MI

CONTROL ROOM, ACTUATOR & CREST GATE
PLAN, SECTIONS & DETAILS

CLIENT	04/01/05				Scale	SCALE
BID					Date	DATE
CONSTRUCTION					Drawn by	DRAWN
RECORD					Checked by	CHECKED
RELEASED TO/FOR	0	1	2	3	Designed by	DESIGNED
	DATE RELEASED				Approved by	APPROVED

I HEREBY CERTIFY THAT THIS DRAWING WAS PREPARED BY ME OR UNDER MY DIRECT SUPERVISION AND THAT I AM A DULY REGISTERED PROFESSIONAL ENGINEER UNDER THE LAWS OF THE STATE OF MICHIGAN.

DATE _____ REG. NO. _____

CLIENT PROJECT No.	DWG. No.	REV. No.
PROJECT #	S-03	REV.

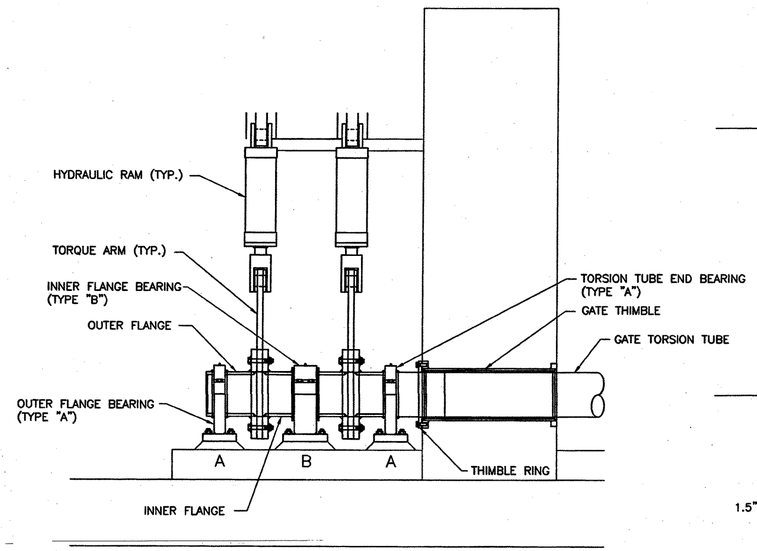

CONTROL ROOM COMPONENT LAYOUT

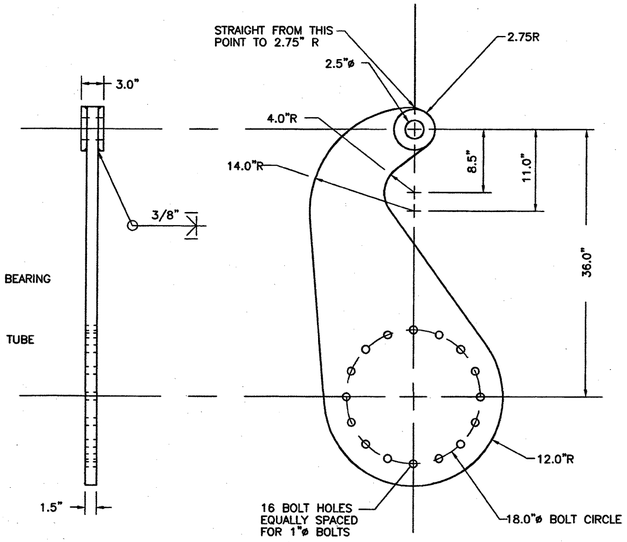

TORQUE ARM

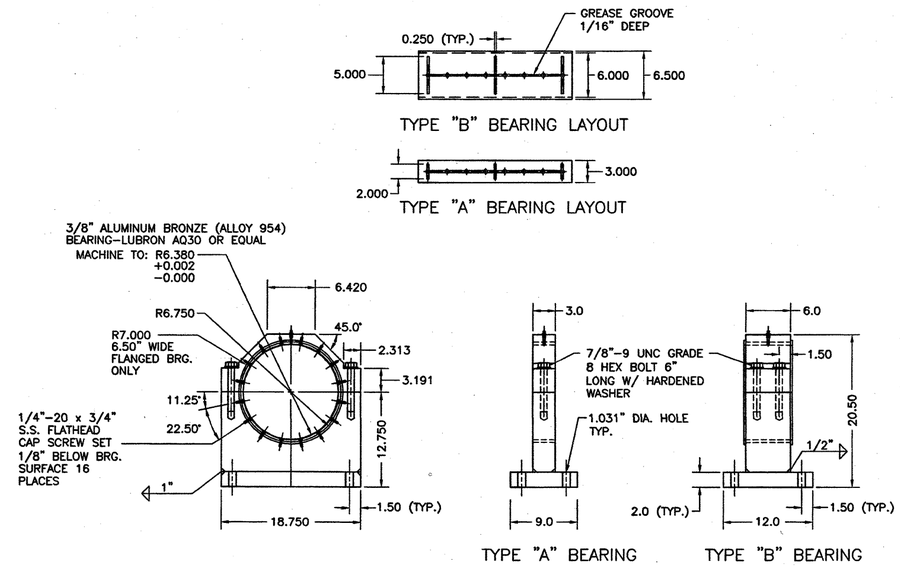

TYPE "A" & "B" BEARING ASSEMBLY

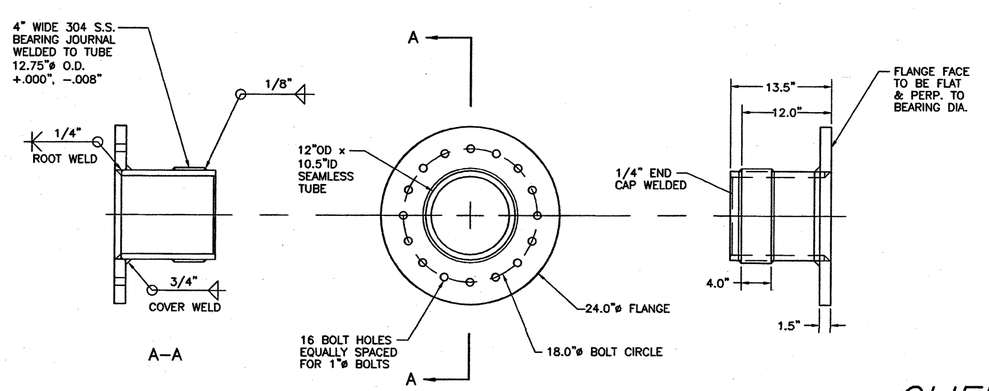

OUTER FLANGE

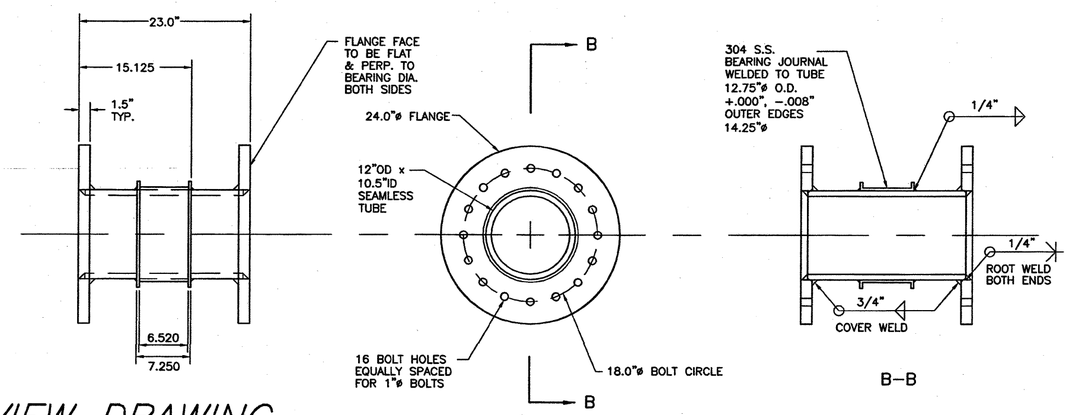

INNER FLANGE

CLIENT REVIEW DRAWING
NOT FOR CONSTRUCTION

ALL MTL. TO BE A-36 OR BETTER UNLESS NOTED

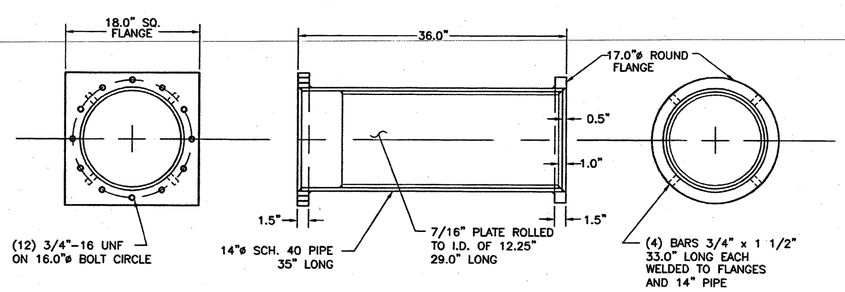

THIMBLE

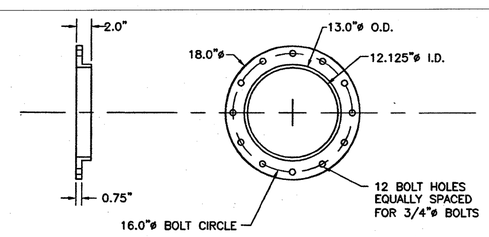

THIMBLE RING

A. Rieli & Associates, LLC
CONSULTING ENGINEERS
1050 Seneca Road
Lake Orion, MI 48362
Phone/Fax: (248) 693-2217
E-mail: <tfprehoda@abcglobal.net>

Prepared for:
LEELANAU COUNTY
LELAND, MI

Project:
LELAND DAM REPAIR/MODIFICATION
LELAND, MI

CONTROL ROOM COMPONENT LAYOUT, DETAILS, AND SECTIONS

CLIENT	04/01/05					Scale	AS SHOWN
BID						Date	DATE
CONSTRUCTION						Drawn by	DRAWN
RECORD						Checked by	CHECKED
RELEASED TO/FOR	0	1	2	3		Designed by	DESIGNED
	DATE RELEASED					Approved by	APPROVED

I HEREBY CERTIFY THAT THIS DRAWING WAS PREPARED BY ME OR UNDER MY DIRECT SUPERVISION AND THAT I AM A DULY REGISTERED PROFESSIONAL ENGINEER UNDER THE LAWS OF THE STATE OF MICHIGAN.

DATE _____ REG. NO. _____

CLIENT PROJECT No.	DWG. No.	REV. No.
PROJECT #	S-04	REV.

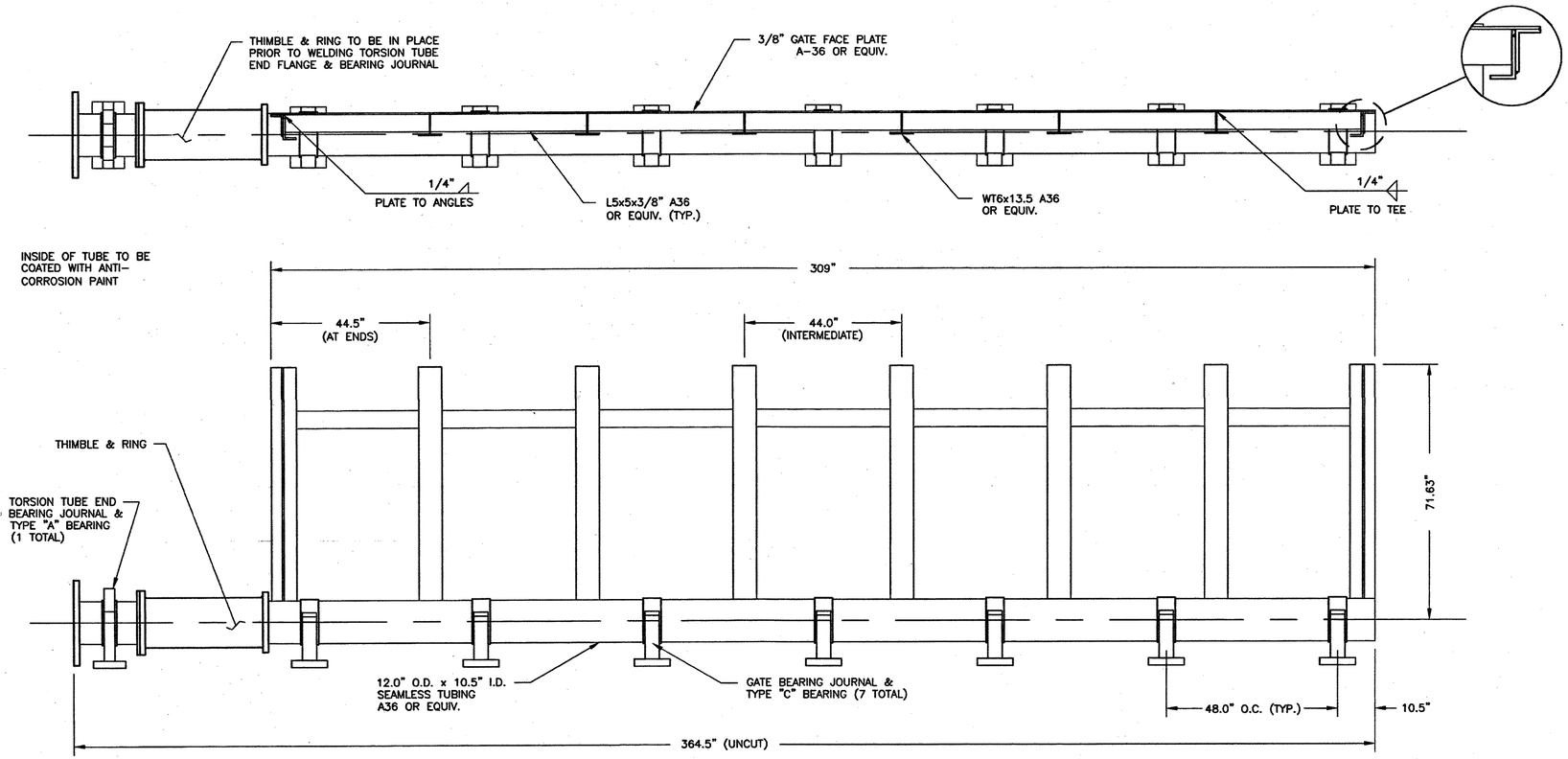

GATE & TORSION TUBE LAYOUT

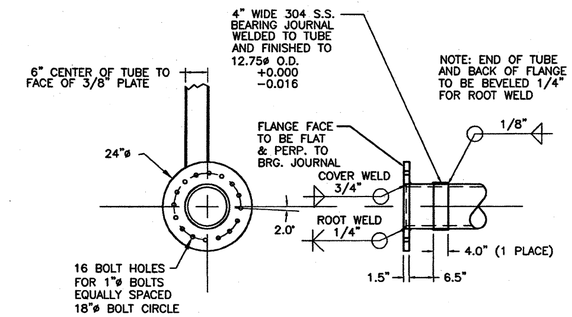

GATE TORSION TUBE END FLANGE & BEARING JOURNAL

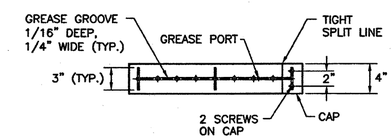

TYPE "C" BEARING LAYOUT

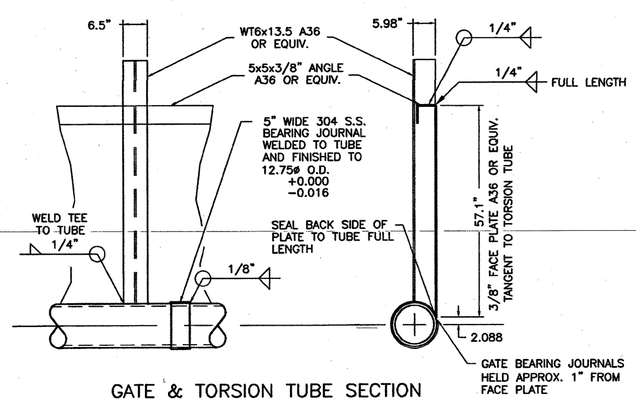

GATE & TORSION TUBE SECTION

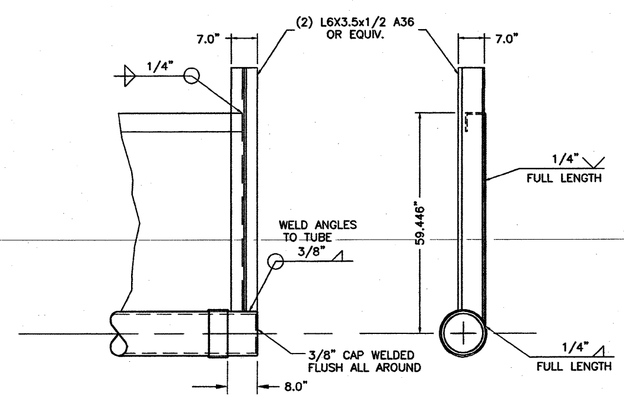

GATE END SECTION

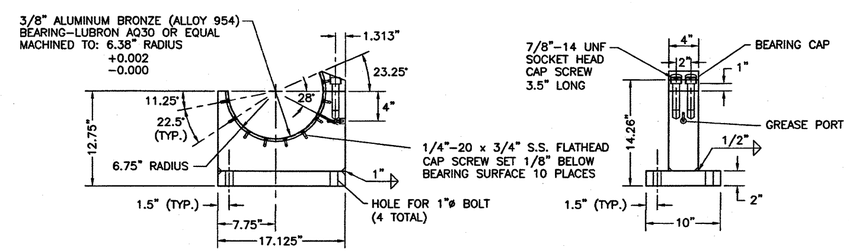

TYPE "C" BEARING ASSEMBLY

02/17/05 REVISION

CLIENT REVIEW DRAWING
NOT FOR CONSTRUCTION

A. Rieli & Associates, LLC
CONSULTING ENGINEERS
1050 Seneca Road
Lake Orion, MI 48362
Phone/Fax: (248) 693-2217
E-mail: <tfprehoda@sbcglobal.net>

Prepared for:
LEELANAU COUNTY
LELAND, MI

Project:
LELAND DAM REPAIR/MODIFICATION
LELAND, MI

SPILLWAY GATE LAYOUT, SECTIONS, & DETAILS

CLIENT	04/01/05				Scale	AS SHOWN
BID					Date	DATE
CONSTRUCTION					Drawn by	DRAWN
RECORD					Checked by	CHECKED
RELEASED TO/FOR	0	1	2	3	Designed by	DESIGNED
	DATE RELEASED				Approved by	APPROVED

I HEREBY CERTIFY THAT THIS DRAWING WAS PREPARED BY ME OR UNDER MY DIRECT SUPERVISION AND THAT I AM A DULY REGISTERED PROFESSIONAL ENGINEER UNDER THE LAWS OF THE STATE OF MICHIGAN.

DATE _____ REG. NO. _____

CLIENT PROJECT No.	DWG. No.	REV. No.
PROJECT #	S-05	REV.

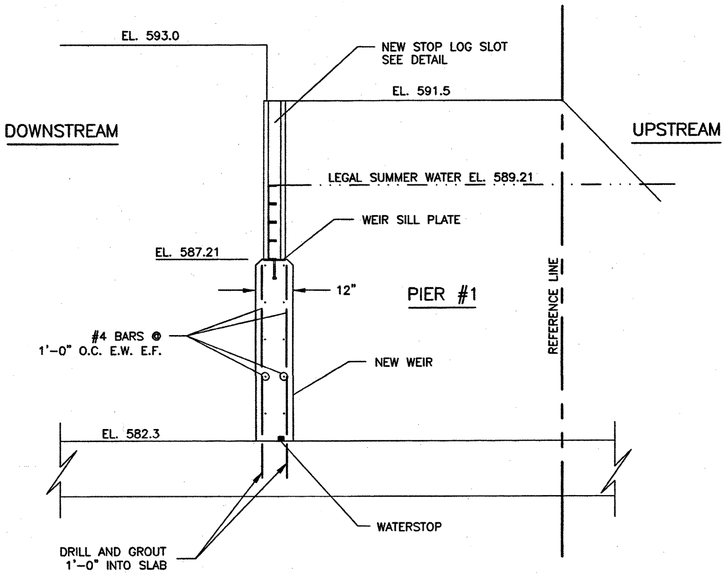

SECTION A–A: FIXED CREST WEIR & STOP LOGS

0 1 2 3
SCALE IN FEET

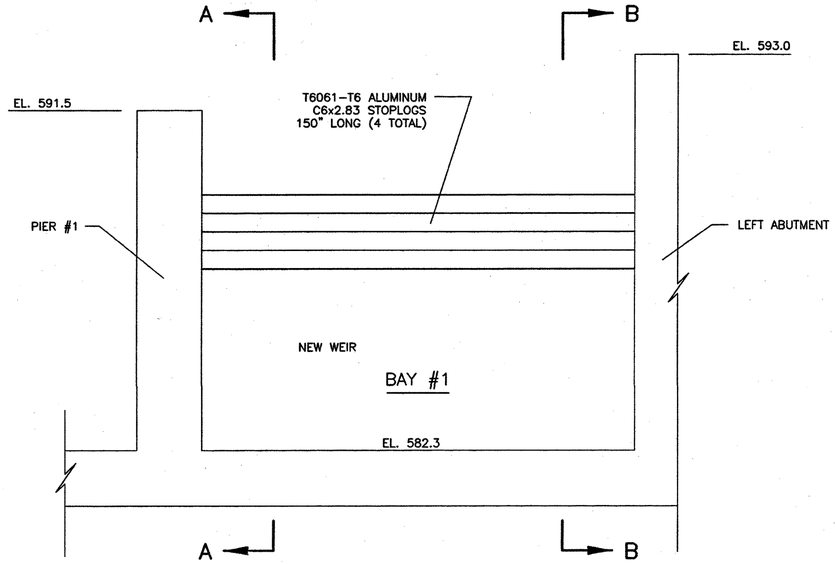

SECTION: FIXED CREST WEIR & STOP LOGS

0 1 2 3
SCALE IN FEET

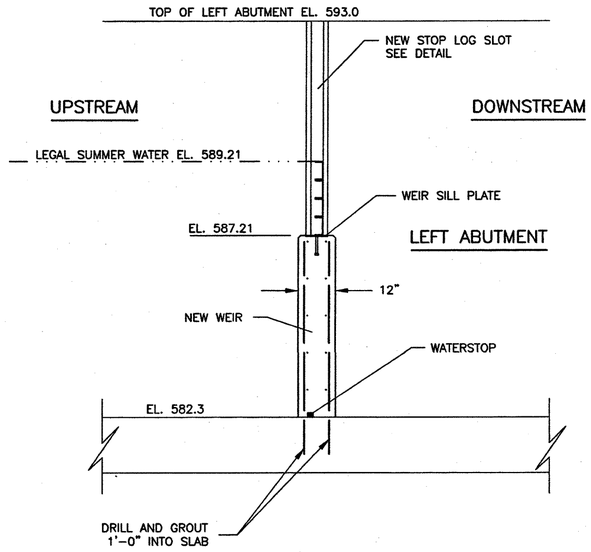

SECTION B–B: FIXED CREST WEIR & STOP LOGS

0 1 2 3
SCALE IN FEET

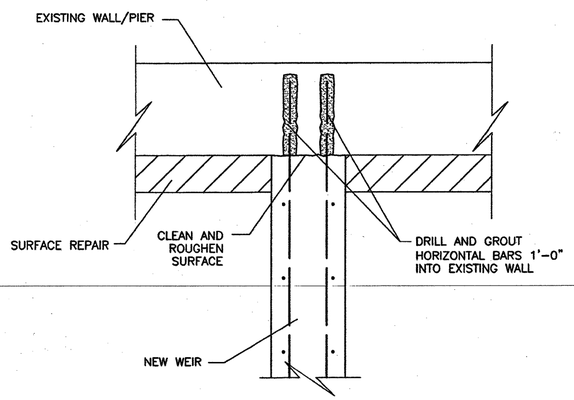

DETAIL: WEIR TO WALL/PIER CONNECTION

0 1 2
SCALE IN FEET

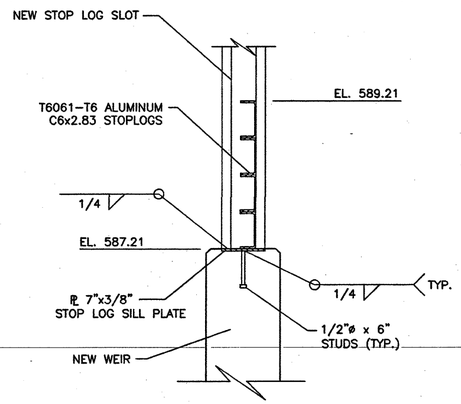

DETAIL: STOP LOG SILL PLATE

0 1 2
SCALE IN FEET

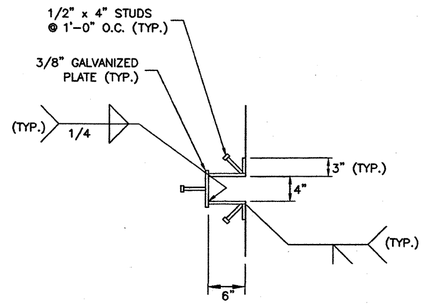

DETAIL: STOP LOG SLOT (TYP.)

0 1 2
SCALE IN FEET

CLIENT REVIEW DRAWING
NOT FOR CONSTRUCTION

A. Rieli & Associates, LLC
CONSULTING ENGINEERS
1050 Seneca Road
Lake Orion, MI 48362
Phone/Fax: (248) 693–2217
E–mail: <tfprehoda@sbcglobal.net>

Prepared for:
LEELANAU COUNTY
LELAND, MI

Project:
LELAND DAM REPAIR/MODIFICATION
LELAND, MI

FIXED CREST WEIR
SECTION AND DETAILS

CLIENT	04/01/05				Scale	AS SHOWN
BID					Date	DATE
CONSTRUCTION					Drawn by	DRAWN
RECORD					Checked by	CHECKED
RELEASED TO/FOR	0	1	2	3	Designed by	DESIGNED
	DATE RELEASED				Approved by	APPROVED

I HEREBY CERTIFY THAT THIS DRAWING WAS PREPARED BY ME OR UNDER MY DIRECT SUPERVISION AND THAT I AM A DULY REGISTERED PROFESSIONAL ENGINEER UNDER THE LAWS OF THE STATE OF MICHIGAN.

DATE _____ REG. NO. _____

CLIENT PROJECT No.	DWG. No.	REV. No.
PROJECT #	S–06	REV.

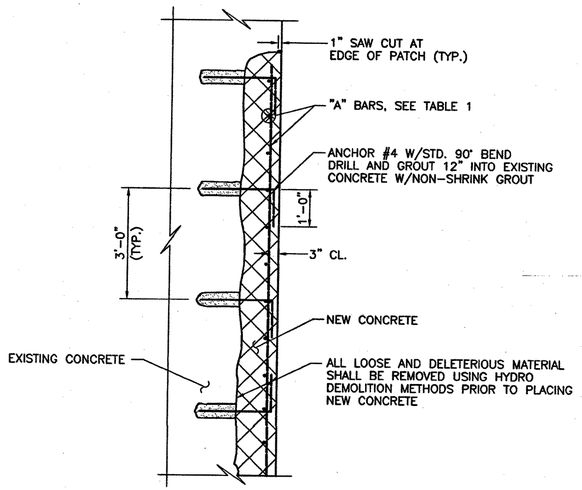

DETAIL: CONCRETE SURFACE REPAIRS

NOT TO SCALE

TABLE 1		
SURFACE REPAIR THICKNESS	BAR SIZE "A"	SPACING
4" TO 8"	#4	12" O.C.
8" TO 14"	#5	12" O.C.

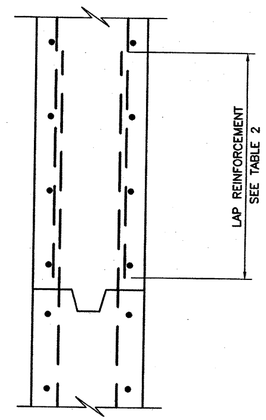

NOTE: THE LOCATION OF CONSTRUCTION JOINTS ARE AS SHOWN ON THE DRAWINGS OR DETERMINED BY THE CONTRACTOR'S CONSTRUCTION SEQUENCE

DETAIL: CONSTRUCTION JOINT (TYP.)

NOT TO SCALE

TABLE 2	
REBAR SPLICE REQUIREMENTS	
BAR SIZE	MINIMUM REQUIRED LAP SPLICE LENGTH
#4	32"
#5	40"
#6	48"
#7	70"
#8	80"

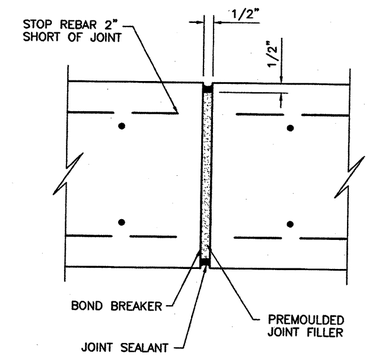

DETAIL: EXPANSION JOINT (TYP.)

NOT TO SCALE

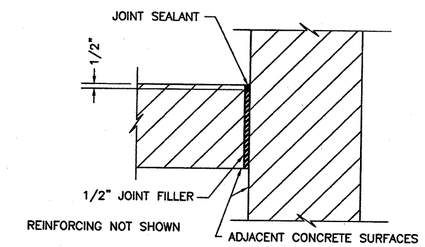

DETAIL: EXPANSION JOINT (TYP.)

NOT TO SCALE

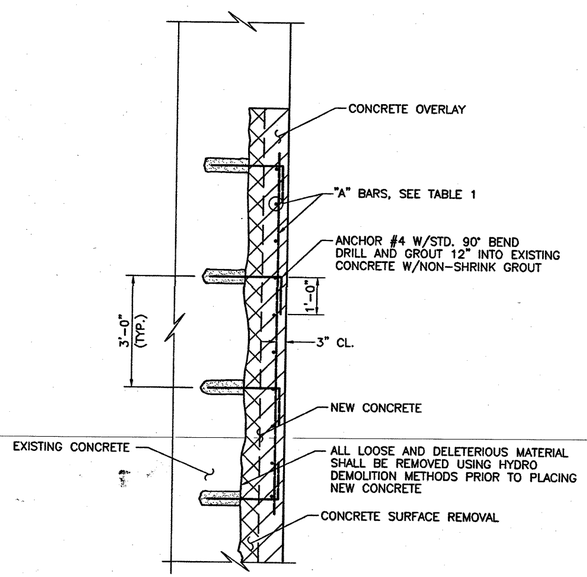

DETAIL: CONCRETE SURFACE REMOVAL/OVERLAY

NOT TO SCALE

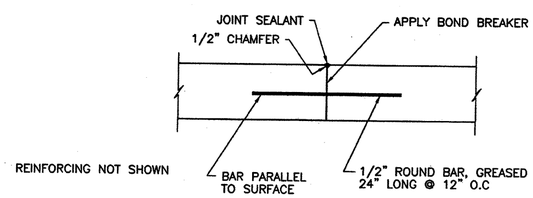

DETAIL: CONTROL JOINT (TYP.)

0 1 2
SCALE IN FEET

CLIENT REVIEW DRAWING
NOT FOR CONSTRUCTION

A. Rieli & Associates, LLC
CONSULTING ENGINEERS
1050 Seneca Road
Lake Orion, MI 48362
Phone/Fax: (248) 693-2217
E-mail: <tfprehoda@sbcglobal.net>

Prepared for:
LEELANAU COUNTY
LELAND, MI

Project:
LELAND DAM REPAIR/MODIFICATION
LELAND, MI

CONCRETE REPAIR & NEW CONCRETE DETAILS

CLIENT	04/01/05					Scale	AS SHOWN
BID						Date	DATE
CONSTRUCTION						Drawn by	DRAWN
RECORD						Checked by	CHECKED
RELEASED TO/FOR	0	1	2	3		Designed by	DESIGNED
	DATE RELEASED					Approved by	APPROVED

I HEREBY CERTIFY THAT THIS DRAWING WAS PREPARED BY ME OR UNDER MY DIRECT SUPERVISION AND THAT I AM A DULY REGISTERED PROFESSIONAL ENGINEER UNDER THE LAWS OF THE STATE OF MICHIGAN.

DATE _____ REG. NO. _____

CLIENT PROJECT No.	DWG. No.	REV. No.
PROJECT #	S-07	REV.

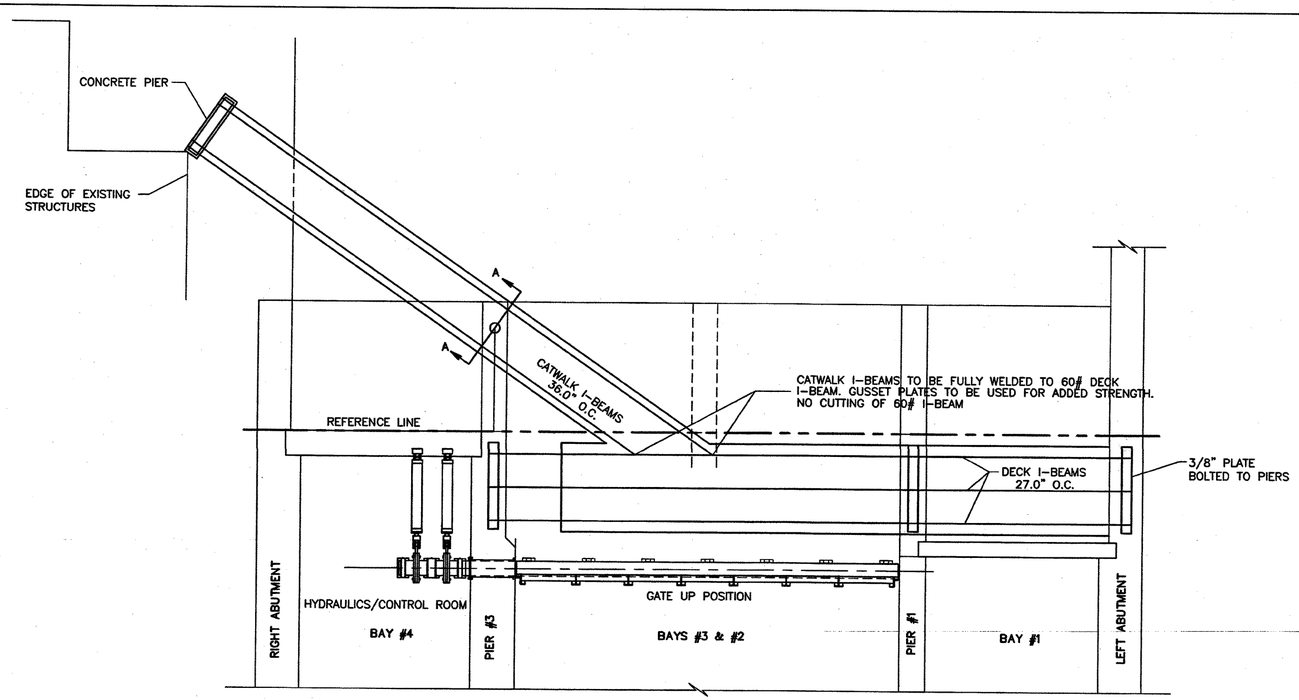

PLAN: OPERATOR'S/ACCESS BRIDGE LAYOUT

0 5 10
SCALE IN FEET

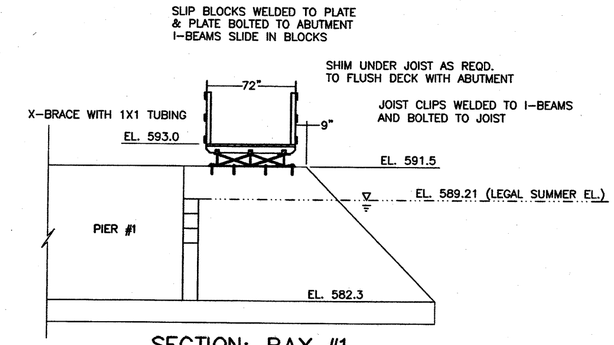

SECTION: BAY #1

0 5 10
SCALE IN FEET

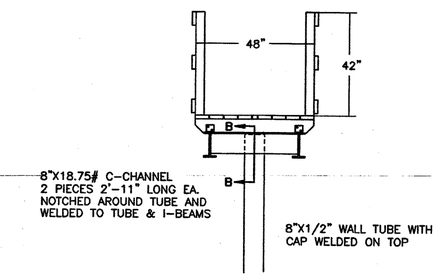

SECTION A-A

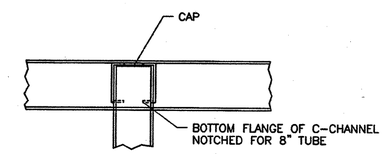

SECTION B-B

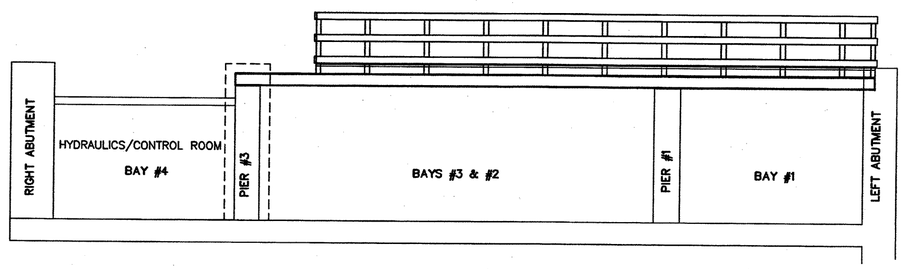

ELEVATION: OPERATOR'S/ACCESS BRIDGE LAYOUT

0 5 10
SCALE IN FEET

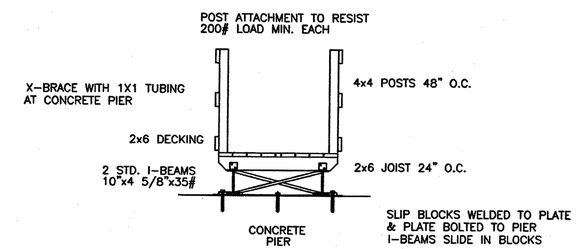

DETAIL: OPERATOR'S/ACCESS BRIDGE

0 1 2 3 4 5
SCALE IN FEET

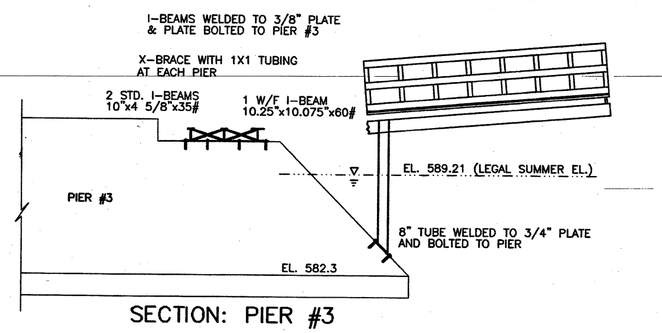

SECTION: PIER #3

0 5 10
SCALE IN FEET

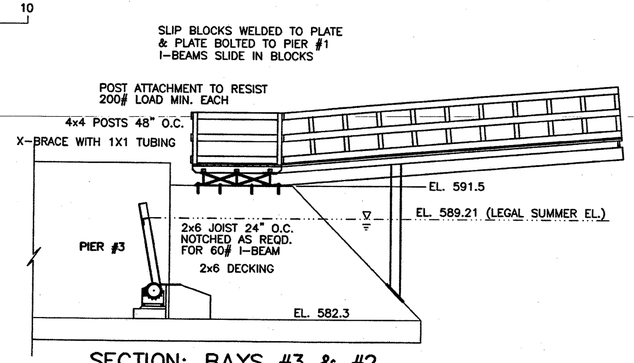

SECTION: BAYS #3 & #2

0 5 10
SCALE IN FEET

CLIENT REVIEW DRAWING
NOT FOR CONSTRUCTION

A. Rieli & Associates, LLC
CONSULTING ENGINEERS
1050 Seneca Road
Lake Orion, MI 48362
Phone/Fax: (248) 693-2217
E-mail: <ctfprehodo@sbcglobal.net>

Prepared for:
LEELANAU COUNTY
LELAND, MI

Project:
LELAND DAM REPAIR/MODIFICATION
LELAND, MI

OPERATOR'S/ACCESS BRIDGE
PLAN, SECTIONS & DETAILS

CLIENT	04/01/05				Scale	SCALE
BID					Date	DATE
CONSTRUCTION					Drawn by	DRAWN
RECORD					Checked by	CHECKED
RELEASED TO/FOR	0	1	2	3	Designed by	DESIGNED
	DATE RELEASED				Approved by	APPROVED

I HEREBY CERTIFY THAT THIS DRAWING WAS PREPARED BY ME OR UNDER MY DIRECT SUPERVISION AND THAT I AM A DULY REGISTERED PROFESSIONAL ENGINEER UNDER THE LAWS OF THE STATE OF MICHIGAN.

DATE _____ REG. NO. _____

CLIENT PROJECT No.	DWG. No.	REV. No.
PROJECT #	S-08	REV.

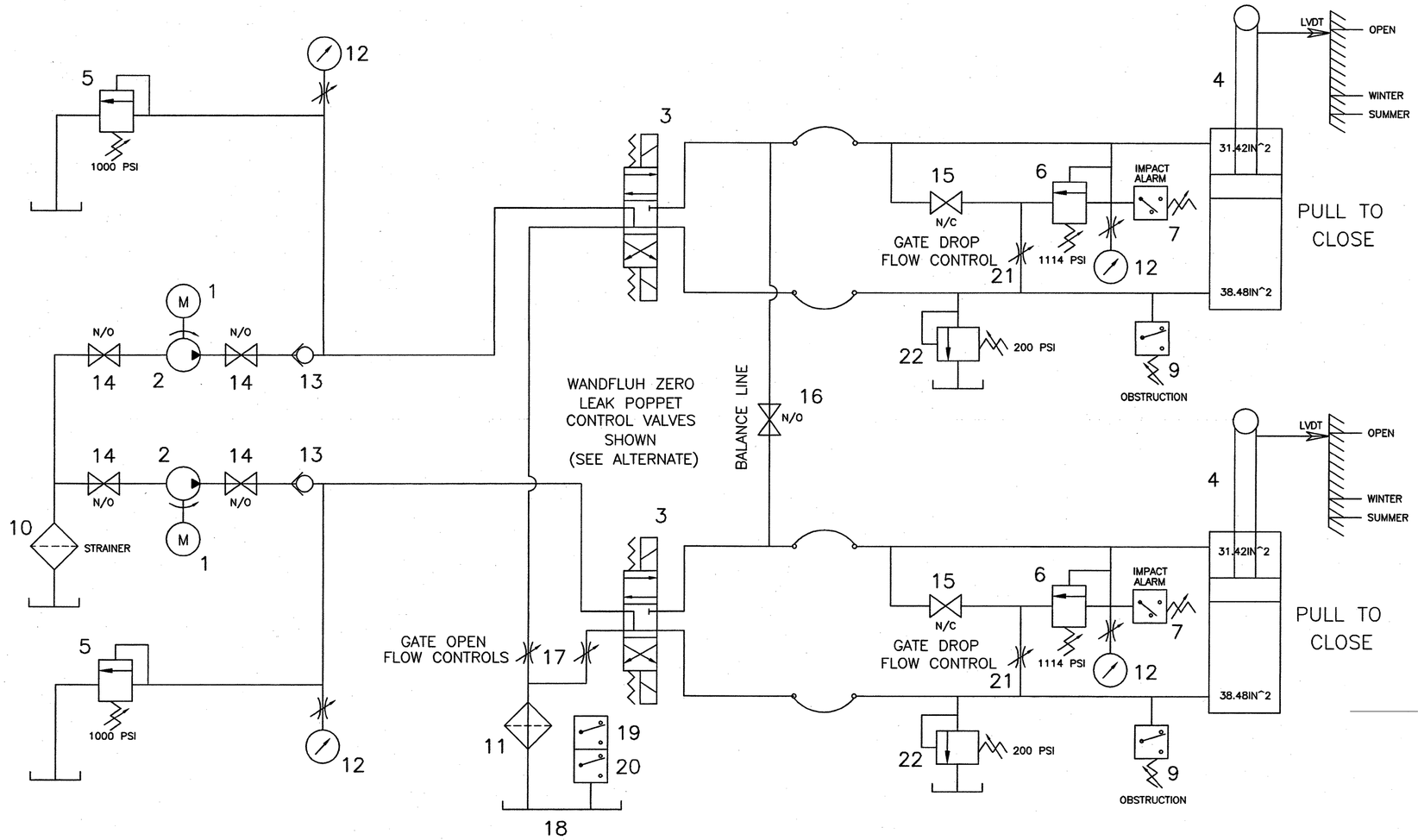

HYDRAULIC SCHEMATIC

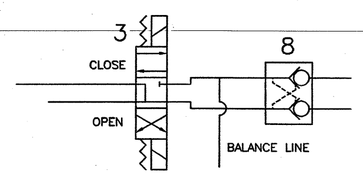

ALTERNATE STD. SPOOL CONTROL VALVES WITH PILOT OPERATED CHECK VALVES AS SHOWN

CLIENT REVIEW DRAWING
NOT FOR CONSTRUCTION

BILL OF MATERIALS

ITEM NO.	QTY.	DESCRIPTION	REMARKS
1	2	MOTOR; ELECTRIC, 1.0 HP MIN., 230 V, 1 PH, 60 HZ, 1750 RPM, TEFC	
2	2	PUMP; POS. DISPL., .75 GPM MIN. @ 1500 PSI & 1800 RPM, 2000 PSI MAX. RATING	
3	2	VALVE; DIRECTIONAL CONTROL, 3 POSITION 4 WAY SPRING CENTERED, SOLENOID OPERATED	
4	2	CYLINDER; HYDRAULIC TIE ROD, 7" ø BORE, 57" STROKE, 3" ø ROD, 2" STOP TUBE, DETACHABLE CLEVIS MOUNTED, ROD END WITH FEMALE ROD CLEVIS PROVIDED WITH ENCAPSULATED SENSOR	
5	2	VALVE; SYSTEM RELIEF WITH ADJUSTABLE RELIEF SETTING, DIFFERENTIAL PISTON STYLE	
6	2	VALVE; IMPACT RELIEF WITH ADJUSTABLE RELIEF SETTING, DIFFERENTIAL PISTON STYLE	
7	2	PRESSURE SWITCH; HYDRAULIC, IMPACT ALARM	
8	2	LOCK VALVE; DUAL PILOT OPERATED CHECK VALVE	
9	2	PRESSURE SWITCH; HYDRAULIC, OBSTRUCTION ALARM	
10	1	INLET LINE STRAINER, 100 MESH, MAGNETIC PARTICAL TRAP, MECHANICAL INDICATOR	
11	1	FILTER; RETURN LINE, 25 MICRON MIN., 25 PSI BY-PASS, MECHANICAL INDICATOR	
12	4	GAUGE; PRESSURE WITH SNUBBER	
13	2	VALVE; CHECK	
14	4	BALL VALVE, PUMP ISOLATION	
15	2	BALL VALVE, CYLINDER DUMP	
16	1	BALL VALVE, BALANCE LINE SHUT OFF	
17	2	NEEDLE VALVE, GATE OPEN FLOW CONTROL	
18	1	30 GAL. MIN. RESERVOIR	
19	1	HIGH TEMP WARNING	
20	1	LOW LEVEL SHUT DOWN	
21	2	NEEDLE VALVE, GATE DROP FLOW CONTROL	
22	2	VALVE; OBSTRUCTION RELIEF WITH ADJUSTABLE RELIEF SETTING, DIFFERENTIAL PISTON STYLE	

HYDRAULIC DATA

SYSTEM PRESSURE ---------- 2000 PSI MIN. RATING
PUMP CAPACITY ---------- .750 GPM/PUMP
MOTOR HP ---------- 1.0 HP EACH

NOTE: ALL COMPONENTS SHALL BE READILY AVAILABLE, STANDARD CATALOG ITEMS.

A. Rieli & Associates, LLC
CONSULTING ENGINEERS
1050 Seneca Road
Lake Orion, MI 48362
Phone/Fax: (248) 693-2217
E-mail: <tfprehoda@sbcglobal.net>

Prepared for:
LEELANAU COUNTY
LELAND, MI

Project:
LELAND DAM REPAIR/MODIFICATION
LELAND, MI

GATE HYDRAULICS SCHEMATIC & BILL OF MATERIALS

CLIENT	04/01/05				Scale	SCALE
BID					Date	DATE
CONSTRUCTION					Drawn by	DRAWN
RECORD					Checked by	CHECKED
RELEASED TO/FOR	0	1	2	3	Designed by	DESIGNED
	DATE RELEASED				Approved by	APPROVED

I HEREBY CERTIFY THAT THIS DRAWING WAS PREPARED BY ME OR UNDER MY DIRECT SUPERVISION AND THAT I AM A DULY REGISTERED PROFESSIONAL ENGINEER UNDER THE LAWS OF THE STATE OF MICHIGAN.

DATE _____ REG. NO. _____

CLIENT PROJECT No.	DWG. No.	REV. No.
PROJECT #	S-09	REV.

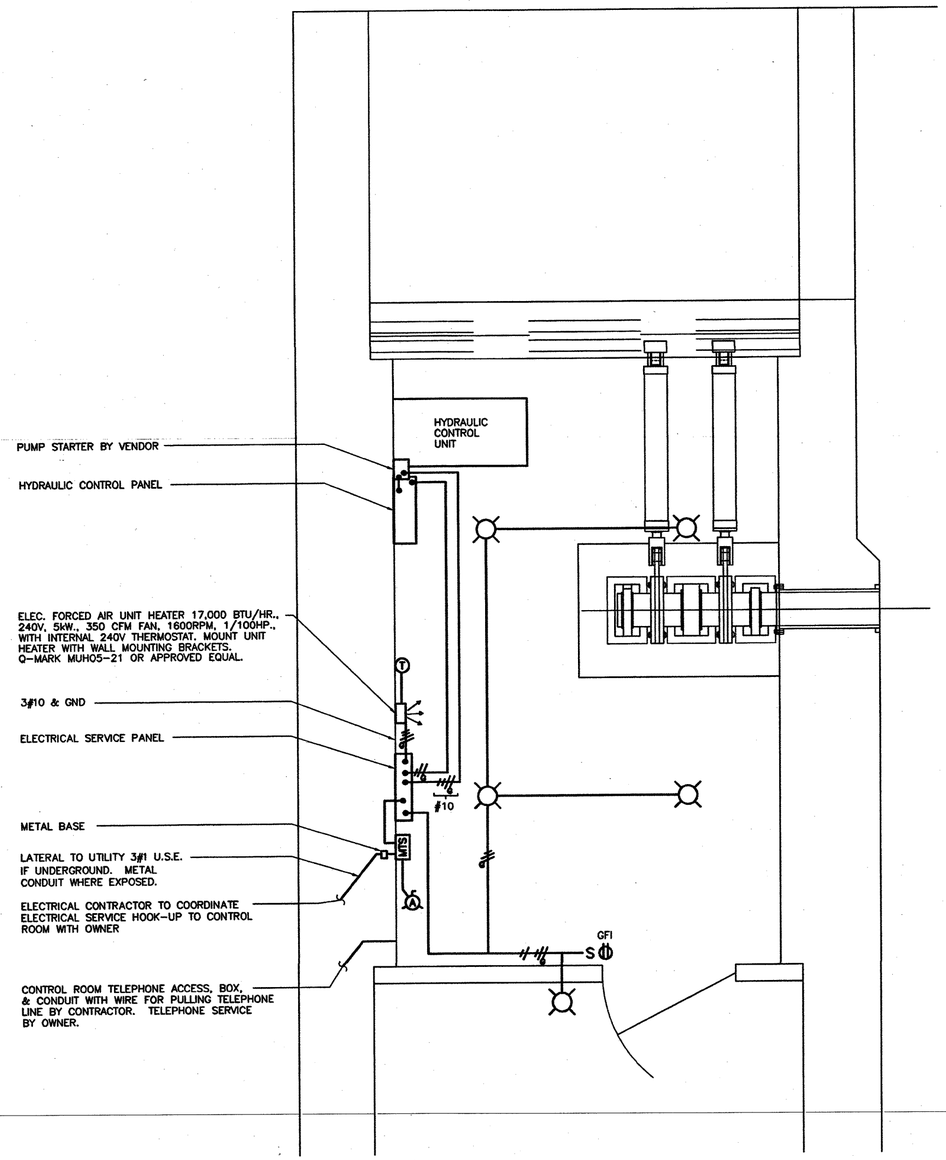

HYDRAULICS/CONTROL ROOM
ELECTRICAL LAYOUT

PANEL NO.	MAIN CB 100 AMPS		MAIN LUGS ONLY ☐		LOCATION : DWG	
ELECTRICAL SERVICE	BUS AMPS 100	PHASE 1	WIRE 3	VOLTS 120/240	FED FROM : UTILITY DWG	
					MFG.	TYPE SERVICE

CIRCUIT DESCRIPTION	CKT NO.	BREAKERS AMPS	POLES	FRAME		BREAKERS AMPS	POLES	FRAME	CKT NO.	CIRCUIT DESCRIPTION
MAIN	1	100	2			100	2		2	AUXILIARY POWER
MAIN	3								4	AUXILIARY POWER
HYDRAULIC PUMP	5	25	2			25	2		6	UNIT HEATER
HYDRAULIC PUMP	7								8	UNIT HEATER
CONTROL PANEL	9	20	1			20	1		10	LIGHTING
SPARE	11	20	1			20	1		12	RECEPTACLES
SPACE	13		–			20	1		14	SPARE
SPACE	15		–			20	–		16	SPACE

ELECTRICAL LEGEND

SYMBOL	DESCRIPTION
	LIGHT FIXTURE, PORCELAIN ENAMELED, VENTILATED REFLECTOR. FURNISHED WITH 100 WATT, A19 INCANDESCENT FROSTED BULBS.
GFI	125VAC, 20A RECEPTACLE, PERSONNEL GROUND FAULT INTERRUPTER TYPE.
S	120V, 20A TOGGLE SWITCH.
	FROM LEFT TO RIGHT: HOT, NEUTRAL AND GROUND, #12 THWN SHOWN TYPICAL IN 3/4" METAL CONDUIT.
T	THERMOSTAT.
A	250VAC, 50A, AUXILIARY POWER RECEPTICAL.
MTS	250VAC, 50A, MANUAL TRANSFER SWITCH.

NOTES:

1.) POWER ROOF VENTILATOR INTERLOCKED TO OPEN MOTORIZED WALL DAMPER.

2.) TOP OF LOUVERS SHALL BE EVEN WITH TOP OF DOORS.

3.) BOTTOM OF ALL ELECTRICAL RECEPTACLES, SWITCHES, PANELS, MOTORS, AND HYDRAULIC EQUIPMENT SHALL BE 4 FT. OR MORE ABOVE THE FINISHED FLOOR.

CLIENT REVIEW DRAWING
NOT FOR CONSTRUCTION

A. Rieli & Associates, LLC
CONSULTING ENGINEERS
1050 Seneca Road
Lake Orion, MI 48362
Phone/Fax: (248) 693-2217
E-mail: <tfprehodar@sbcglobal.net>

Prepared for:
LEELANAU COUNTY
LELAND, MI

Project:
LELAND DAM REPAIR/MODIFICATION
LELAND, MI

HYDRAULICS/CONTROL ROOM
ELECTRICAL LAYOUT

CLIENT	04/01/05				Scale	SCALE
BID					Date	DATE
CONSTRUCTION					Drawn by	DRAWN
RECORD					Checked by	CHECKED
RELEASED TO/FOR	0	1	2	3	Designed by	DESIGNED
	DATE RELEASED				Approved by	APPROVED

I HEREBY CERTIFY THAT THIS DRAWING WAS PREPARED BY ME OR UNDER MY DIRECT SUPERVISION AND THAT I AM A DULY REGISTERED PROFESSIONAL ENGINEER UNDER THE LAWS OF THE STATE OF MICHIGAN.

DATE _____ REG. NO. _____

CLIENT PROJECT No.	DWG. No.	REV. No.
PROJECT #	S-10	REV.

APPENDIX D

PHOTOGRAPHS
MAINTENANCE LOG (Included in Photographs)

Looking south at downstream face of principal spillway (actuated weirs).

Looking northwest at downstream channel.

Wooden gate door downstream from just downstream of main door into hydraulics / control room (former Bay #4).

Looking downstream from just downstream of main door into hydraulics / control room.

Looking northeast along former downstream end of Bay #4 spillway, downstream of hydraulics / control room.

Looking southeast within hydraulics / control room at hydraulic gate actuators.

Looking east at corner of hydraulics / control room.

Looking south at south corner within hydraulics / control room.

Looking northeast at ceiling of hydraulics / control room.

Looking northwest at ceiling within hydraulic / control room.

Looking northwest at entrance door and northwest wall of hydraulic / control room.

Hydraulic ram mounts to steel I-beam at ceiling / wall corner (typical of 2).

Torque arm - bearings and bearing mounts.

Hydraulic rams.

Water Level Gauge - reading 598.2' on date on inspection.

Typical backflooding into Bay #4 downstream of hydraulic / control room due to high Lake Michigan water levels.

Looking south at principal spillway left abutment wall.

Looking southeast principal spillway (actuated weir gate).

Looking north from walkway at top of actuated weir and right principal spillway abutment wall.

Looking southwast at Bay #1 (fixed concrete crest with removable aluminum stoplogs).

Looking east at principal spillway (actuated weir gate).

Looking northeast at downstream end of principal spillway and downstream end of right principal spillway abutment wall.

Looking north at downstream end of principal spillway and downstream end of right principal spillway abutment wall.

Looking northwest at downstream channel.

Looking southeast at outside of Bay #1 left abutment wall.

Looking east across downstream end of Bay #1 spillway.

Looking east across at downstream side of dam.

Looking southeast at Principal (former Bay #2 and #3) and fixed crest / stoplog (Bay #1) spillway.

Looking north at walkway and upstream side of dam.

Looking northeast across upstream side of dam (warning buoys).

Looking southeast at upper end of left approach abutment wall and wooden seawall.

Left approach abutment wall upper end at northwest end of wood seawall.

Looking northwest at wooden seawall from northwest (upstream) end of left abutment wall.

Looking northeast along turned back portion of wooden seawall (left side of channel, upstream of left abutment wall)

Looking southwest across upstream face of dam at left upstream abutment wall and wooden seawall fence.

Looking east at upstream channel, warning buoys and walkway.

Upstream face of concrete wall and roof at hydraulic / control room (former Bay #4) Walkway steel I-beam supports.

EMERGENCY POWER / LELAND DAM
(GASOLINE) ONON 6500 WATT GENERATOR
LOCATED IN JAIL POLE BUILDING

POWER CORD LOCATED IN DAM CONTROL ROOM. POWER CORD CONNECTION & ROCKER SWITCH LOCATED ON TELEPHONE POLE AT STREET ENTRANCE TO DAM WALK-WAY BY (COVE) GARBAGE DUMPSTERS.

PADLOCK COMBINATION: 1949

BEFORE CONNECTING GENERATOR TO DAM FEED, SHUT OFF INDIVIDUAL BREAKER SWITCHES AND MAIN BREAKER IN DAM CONTROL ROOM. (POWER UP)
AFTER GENERATOR POWER (ON LINE) FLIP ON MAIN BREAKER SWITCH. THEN FLIP ON INDIVIDUAL BREAKER.
(AFTER) CONSUMERS POWER IS BACK ON, (MAKE SURE HYDRALIC PUMP IS OFF) REVERSE PROCEEDURE.
FLIP OFF INDIVIDUAL BREAKERS, THEN FLIP OFF MAIN BREAKER.
(SHUT DOWN) GENERATOR!
FLIP ROCKER SWITCH BACK TO MAIN
RETURN TO DAM CONTROL ROOM AND FOLLOW THE (POWER UP) PROCEEDURE

DE-WATERING OF LELAND DAM

STEEL (T) BARS LOCATED IN JAIL POLE BAR IN S.E. CORNER

ONAN GENERATOR LOCATED IN SAME AREA.

SPARE KEYS LOCATED IN ADMINISTRATORS OFFICE KEY CABINET.

Leland Dam Operations Reference List

1	Check for water on floor
2	Check collar on cam next to wall
3	Tighten collar/alternating bolt turns, so ring tightens flush
4	Check central board for any alarms - DO NOT RESET
5	Check water height in site glass
6	Check computer control board to verify manual mode or auto mode
7	Check to see if (1/4 swing) valve handles - located at lower end of cylinder housing, next to exposed rams, are vertical (closed) to ram housing or horizontal (open)

NOTE: manual mode on touch screen - valves should be ***closed*** (vertically) black switches on panel should be OFF

NOTE: auto mode on touch screen - valves should be *open* (horizontally) black switches on panel should be on AUTO

O MANUALL ADJUST GATE

1	Open the 2 (1/4 swing) valve handles at lower end of cylinder
2	Turn black switches on control panel to AUTO
3	Push "manual screen" on computer touch board
4	Push "manual mode"
5	Push "start pumps"
6	Push "open gate" or "close gate"
7	When finished push "stop pumps"
8	Push "main screen"
9	Push "manual mode"
10	Turn black switches of "OFF"
11	Close (vertical) the 2 (1/'4 swing) valve handles at end of cylinder

- Check for cam leaks
- Tighten bolts evenly to stop leaks

NOTE: Opening gate will create cam leaking.

*****VERY IMPORTANT*****

Anytime you turn hydraulic pumps on manually, or when system is put in Auto Mode, focus on making sure the 2 (1/4 swing) valves are OPEN (horizontal)

ANUAL MODE	WHEN LEAVING CONTROL ROOM AND SYSTEM IS IN MANUAL MODE MAKE VERY SURE THAT THE 2 (1/4 SWING) VALVES ARE CLOSED (VERTICAL)

APPENDIX E

2019 UNDERWATER INSPECTION REPORT – GREAT LAKES ENGINEERING
2012 INSPECTION REPORT
2018 STRUCTURAL LETTER REPORT

GREAT LAKES ENGINEERING GROUP, LLC

LEELANAU COUNTY
2019 UNDERWATER INSPECTION

LELAND DAM
MI DAM ID. 510

SUBMITTED TO:
LEELANAU COUNTY
BOARD OF COMMISSION

SUBMITTED BY:
GREAT LAKES ENGINEERING GROUP

GLEG FILE NO: 1019-2-603

TABLE OF CONTENTS

Underwater Bridge Inspection
Leeland Dam
MI Dam ID. 510
July 24, 2019

1. Executive Summary
2. General Site Procedures
3. Dam Safety Underwater Field Inspection Findings
4. Substructure Elevation Drawings and Soundings
5. Photo Log

EXECUTIVE SUMMARY

The Leland Dam is classified as a "High Hazard Dam" by the Michigan Department of Environment, Great Lakes, and Enegty (ELGE) Dam Safety Division and is regulated by Part 307, Inland Lake Levels, of the National Resources and Environmental Protection Act (NREPA), 1994 PA 451. The dam meets the size criteria specified in Part 315, Dam Safety, of the NREPA, Section 31518 requiring the owner of the dam to complete dam safety inspection reports once every three years. This report presents the results of the underwater portion of the EGLE 2019 Dam Safety Inspection for inclusion in the full 2019 Dam Safety Inspection performed by Spicer Group for the Leland Dam, MI Dam ID No. 510.

Leland Dam
MI Dam ID.510
Leelanau County

The Leland Dam is located in the village of Leland, Leelanau County, Michigan. It is operated by the Leelanau County Board of Commissioners. The dam provides control fo the legal lake level control for Lake Leelanau. It is a "High Hazard" potential dam with a 200 yr discharge of 1200 cfs. The dam was last reconstructed in 2006-2007.

The 2019 underwater inspection found the dam to be in good condition. The following observations were made during the underwater inspection:

- There are spalls on the bottom corner of the downstream spillway overhang with the steel stringer exposed with pitting.
- Scaling up to 3" deep in the concrete of the underwater portions of the downstream cutoff wall concrete and piers walls was noted.
- The steel sheet pile wall is in place along the upstream end of the upstream spillway with no leakage noted.
- The timber retaining walls on the south end, both upstream and downsteam ends, have several split vertical boards.

GENERAL SITE PROCEDURES

QUALIFIED TEAM

The underwater inspection was conducted by a four-person team consisting of a Dive Inspector, a Professional Engineer Dive Inspector, a Professional Engineer Dive Team Leader, and a Professional Engineer Dive Tender.

EQUIPMENT

The inspection was performed using Self-Contained Underwater Breathing Apparatus (SCUBA). During the inspection the divers accessed the bridge and worked from a 10-foot jon boat. Two-way wireless communications were used to convey inspection notes from the diver to the team leader and recorded on note sheets. Other equipment consisted of an underwater digital camera, high intensity flashlight, dive knife, scraper, probing rod, 25-foot survey rod, and a digital depth sounder with built in transducer.

LEVEL OF INSPECTION

The Level I underwater inspection consisted of a close visual and tactile examination using large sweeping motions of the hands where visibility was limited. The inspection was conducted over the total exterior surface of each underwater substructure unit. A Level II inspection was performed on 10% of the submerged substructure units. Probing along the mud line was also done along each substructure unit and the adjacent streambed. Upstream and downstream cross sections were taken and recorded using a benchmark.

APPROVALS

This bridge does not fall under the jurisdiction of the United States Coast Guard (USCG). Approval was not required to perform the underwater inspections.

FIELD INSPECTION FINDINGS

The Leland Dam is classified as a "High Hazard Dam" by the Michigan Department of Environment, Great Lakes, and Enegry (ELGE) Dam Safety Division and is regulated by Part 307, Inland Lake Levels, of the National Resources and Environmental Protection Act (NREPA), 1994 PA 451. The dam meets the size criteria specified in Part 315, Dam Safety, of the NREPA, Section 31518 requiring the owner of the dam to complete dam safety inspection reports once every three years. This report presents the results of the underwater portion of the EGLE 2019 Dam Safety Inspection for inclusion in the full 2019 Dam Safety Inspection performed by Spicer Group for the Leland Dam, MI Dam ID No. 510. The portions of the dam submerged in water were subject to underwater inspection on July 24, 2019.

Below is a summary of the field observations for the various components of the underwater inspection. Refer to the section titled "Substructure Elevation Drawings and Soundings" for more detailed information including water depths.

Upstream Substructure Units	Observations Below the Waterline	Observations Above the Waterline
Spillway	• Chalky sediment covering most of exposed surface. • Steel sheet wall in place cut flush with top of spillway. • One steel sheet appears to be missing north of pier #1 • Face of steel sheeting is exposed 0" to 8".	• N/A
Steel Sheet Wall (Upstream of left abutment)	• Chalky sediment covers steel. • No undermining found.	• Light rust on sheets with most of paint system failed.
Left Abutment	• Lime sediment covers the upstream wall. • No deterioration at the wall spillway connection.	• No cracks or spalls noted.
Pier #1	• Chalky sediment covering most of exposed surface. • No deterioration at the wall spillway connection.	• No cracks or spalls noted.
Pier #2 (removed)	• N/A	• N/A
Pier # 3	• Chalky sediment covering most of exposed surface.	• No cracks or spalls noted.
Machine Room Wall	• Chalky sediment covering most of exposed surface.	• No cracks or spalls noted.
Right Abutment	• Chalky sediment covering most of exposed surface. • No deterioration at the wall spillway connection.	• No cracks or spalls noted.
Steel Sheet Wall (Upstream of right abutment)	• Chalky sediment covers steel. • No undermining found.	• Weathering steel has good patina.

FIELD INSPECTION FINDINGS

Downstream Substructure Units	Observations Below the Waterline	Observations Above the Waterline
Spillway	• Missing section of steel I beam edging in bay 3. • Edge spalls on top and bottom corners. • Wood form boards mostly still in place from construction.	• Light algae growth.
Concrete Cutoff Wall (4' under edge of spillway)	• 1" to 3" deep scale throughout the wall surface. • There is a 3' long by 2" high undermined area in bay #3 with 2" of penetration.	• NA, completely underwater.
Timber Sheet Wall (Downstream of left abutment)	• Wide gaps in outside lamination of wakefield wall. • Outside lamination deteriorated at mudline.	• NA, only deck fascia exposed.
Left Abutment (Upstream)	• Top corner of downstream end is spalled/scaled with exposed rebar. • Downstream adjacent wall has the top corner spalled.	• No cracks or spalls noted.
Pier #1	• The top corner of the downstream end of the scour wall below the spillway overhang is spalled/scaled with exposed rebar. • Underwater portion of wall has been removed or tipped over. Large chunk of concrete riprap is likely the old wall.	• No cracks or spalls noted.
Pier #2 (removed)	• Downstream adjacent scour wall has the top corner spalled.	• N/A, removed with 2006-2007 project.
Pier # 3 (Upstream)	• The top corner of the downstream end of the scour wall below the spillway overhang is spalled/scaled. • Downstream adjacent scour wall has the top corner spalled and wall is mostly missing.	• No cracks or spalls noted.
Right Abutment	• 1" to 3" deep scale throughout the wall surface. • Mostly buried with riprap/rubble.	• No cracks or spalls noted.
Retaining Wall (Downstream of right abutment)	• Only partially accessible due to rubble along wall and timber deck above. • No undermining found.	• Covered with timber deck for restaurant.

SUBSTRUCTURE

Left abutment and connecting walls

The left abutments consist of a solid abutment wall founded on a concrete slab footing. The portion above the spillways has been rehabilitated and in good condition. The portion under the downstream spillway, downstream of the cutoff wall, has deep spall with exposed rebar.

Left abutment and spillway (upstream end)

There is a section steel sheet wall upstream of the left abutment that is in fair condition with surface rust above the waterline. It is coated with a chalky sediment up to 1/2" thick. The steel sheeting is in good condition where the sediment was removed. There is no undermining of the steel wall.

There is a section of timber wakefield wall upstream of the upstream steel sheet wall. No undermining was found, but settlement was observed behind the wall.

Left abutment (downstream end)

There is a section of timber wakefield wall on the downstream end of the left abutment with timber piles in front at corners. The timber wakefield wall starts upstream of the end of the left abutment and parallels it before turning perpendicular away from the abutment. The outside lamination of the timber planks do not reach the current mudline indicating the channel bottom has scoured along the wakefield wall.

Pier #1

Pier #1 consists of a variable height wall cast on the spillway slab. The wall above the slab has been rehabilitated and is in good condition. At the downstream end, there were scour walls, similar to the other piers, directly below the pier that is no longer in place. The scour walls have either tipped over, or been removed and utilized as riprap along with other portions of the dam that were removed with a previ-

Pier #1 (upstream end)

ous rehab project.

Pier #2

Pier #2 was removed with the rehabilitation project. At the downstream end there is a scour wall directly below where Pier #2 was that intersects the downstream cutoff wall and extended to the end of the spillway. There was an additional scour wall separated by a gap that continued downstream. Both of these scour walls have 1" to 3" deep scale.

Pier #2 scour wall spall.

Pier #3

Pier #3 consists of a variable height wall cast on the spillway slab. The wall above the slab has been rehabilitated and is in good condition. The wall serves as the south wall of the machine room. At the downstream end here is a scour wall underwater directly below Pier #3 that intersects the downstream cutoff wall and extends to the end of the spillway. There is an additional scour wall separated by a gap that continues downstream. Both of these scour walls have scale throughout their surface and spalls at the top corners adjacent to the gap between the walls. There is a gap between the slab and the top of the sour wall under the spillway overhang.

Pier #3 downstream end

Right abutment and connecting walls

The right abutments consist of a solid abutment wall founded on a concrete slab footing. The portion above the spillways has been rehabilitated and in good condition. The portion under the downstream spillway, downstream of the cutoff wall has scale where visible, but most of the surface is covered with rubble.

There is a section steel of sheet wall upstream of the right abutment that is in good condition with surface rust above the waterline. It is coated with a chalky sediment up to 1/2" thick. The steel sheeting is in good condition where the sediment was removed.

Cutoff wall and right abutment

There is no undermining of the steel wall.

There is a section of timber wakefield wall on the downstream end of the right abutment with timber piles in front at corners. The timber wakefield wall starts at the end of the right abutment and parallels it. The toe of the wakefield wall appears to be well buried.

Downstream spillway overhang

Upstream Spillway

The upsteam spillway is a concrete slab with a concrete cutoff wall below the slab. Steel sheeting was left in place at the face of the spillway during the recent rehabilitation project. There is grout between the spillway and the sheeting most of the length. There is a gap in the grout at the original Bay 2 and there is one sheet that is either cut off well below the spillway or was removed. The upstream spillway is partially covered with sediment and in good condition with no undermining.

Upstream spillway and steel sheeting

Downstream Spillway

The downstream spillway is a concrete slab that overhangs a cutoff wall by up to 4'. The slab is up to 4' above the channel bottom at the cutoff wall. The end of the spillway overhang slab has scattered spalls on both the top and bottom. There is a steel stringer edging on the end of the overhang which is missing in bay 3 and has heavy rust and pitting in the remaining locations. The spillway slab is in good condition other than the end 3" where spalls were noted.

There was a small area (approximately 3' long) in bay 3 that undermining of the edge of the cutoff wall was observed. The vertical height at the edge of the cutoff wall was approximately 1" and penetration was 2" or less. The cutoff wall has 1" to 3" deep scale throughout.

Downstream edge of spillway

SCOUR COUNTERMEASURES

Riprap and rubble are in place on the downstream channel bottom. Steel sheeting is in place at the upstream channel bottom.

NAVIGATION PROTECTION SYSTEMS

This watercourse is not navigable according to the USCG, therefore navigation protection systems are not required.

There is a floating safety boom on the upstream end of the dam to keep recreational boats and swimmers away from the upstream end of the dam.

Safety boom

CHANNEL AND CHANNEL PROTECTION

The physical conditions associated with the flow of water through the dam, such as stream stability and the condition of the channel and slope, were evaluated.

There sheet walls in place along the channel banks in all quadrants. The sheeting is in good condition adjacent to the dam. No erosion was found on the channel banks near the dam.

STREAMBED PROFILES

Soundings of the channel bottom were taken at the upstream and downstream ends of the dam along the spillway slabs. Please refer to the "Substructure Elevation Drawings and Soundings" tab of this report for the channel soundings.

RECOMMENDATIONS

The following are work recommendations for the Leland Dam as a result of the underwater inspection:

- None at this time.

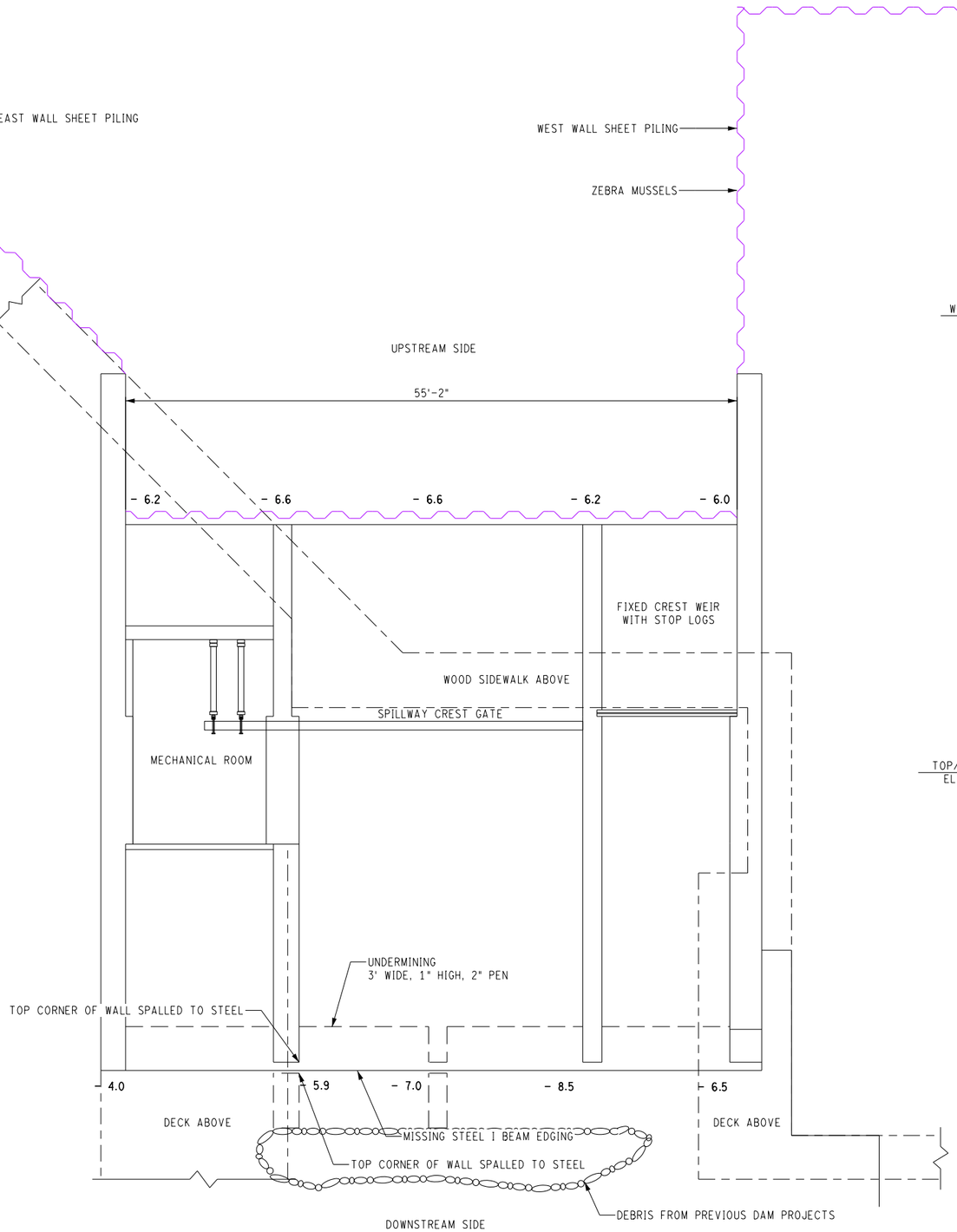

PLAN OF DAM

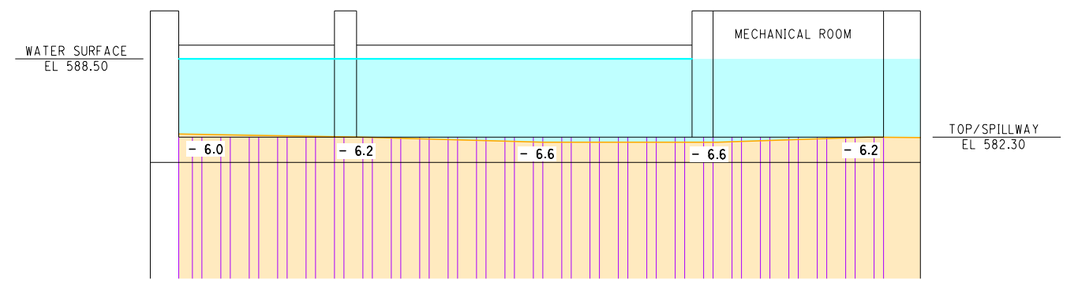

UPSTREAM ELEVATION

(LOOKING DOWNSTREAM)

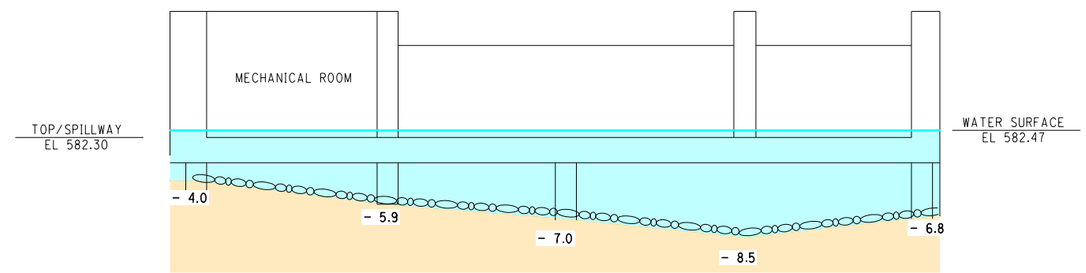

DOWNSTREAM ELEVATION

(LOOKING UPSTREAM)

NOTE:

WATER SURFACE ELEVATION AT THE TIME OF DIVE INSPECTION WAS 588.50 ON 07/24/19. BENCH MARK ELEVATION WAS 582.30 TAKEN AT TOP OF SPILLWAY.

AT THE TIME OF DIVE

AMBIENT AIR TEMP	68°
WATER TEMP	70°
VELOCITY OF WATER	0
TURBIDITY	4'
STREAMBED MATERIAL	COBBLE AND RUBBLE

LEGEND

-00.0	SOUNDING DEPTH FROM WATER SURFACE TO RIVER BOTTOM.
-00.0	SOUNDING DEPTH FROM WATER SURFACE TO RIVER BOTTOM ALONG BRIDGE FASCIA
	RIPRAP
	SHEET PILING
	TIMBER/DEBRIS PILE

LEELANAU COUNTY

LELAND DAM

UNDERWATER DAM INSPECTION
CITY OF LELAND, MICHIGAN

DRAWING: SOUNDING PLAN	
STRUCTURE NO:	GLEG JOB NO: 1019-2-603
DRAWN BY: JLS	DATE: 07/24/19
CHECKED BY: ALT	FILE: 603 plan.dgn

GREAT LAKES ENGINEERING GROUP, LLC

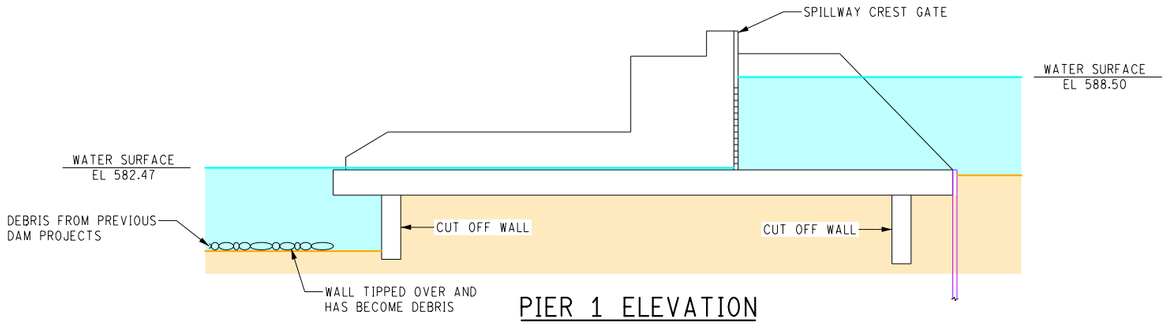

PIER 1 ELEVATION

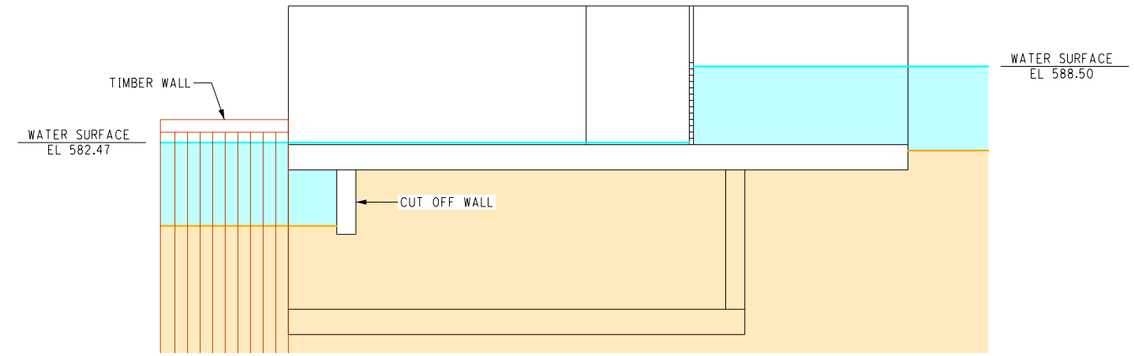

RIGHT ABUTMENT ELEVATION

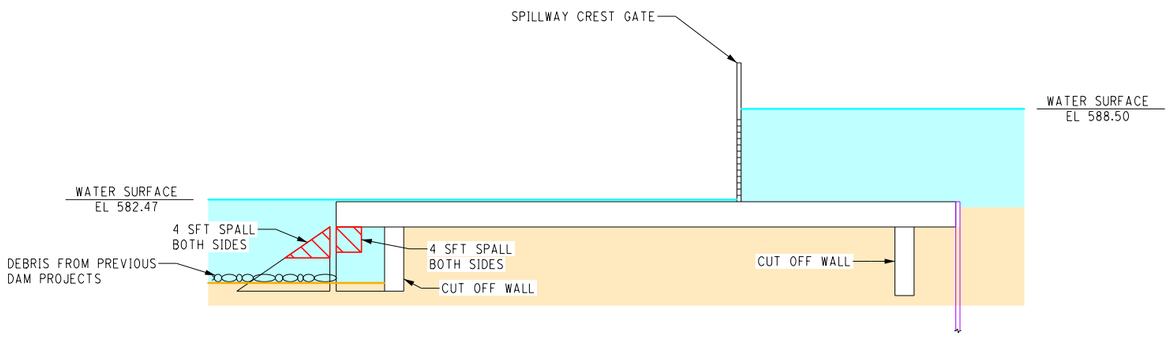

PIER 2 ELEVATION

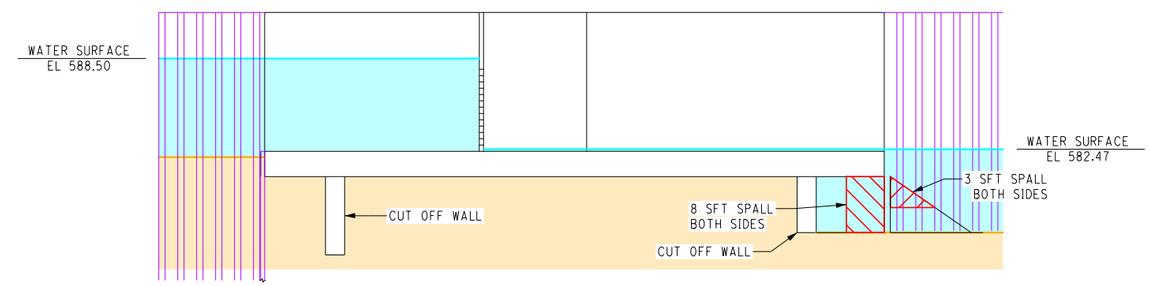

LEFT ABUTMENT ELEVATION

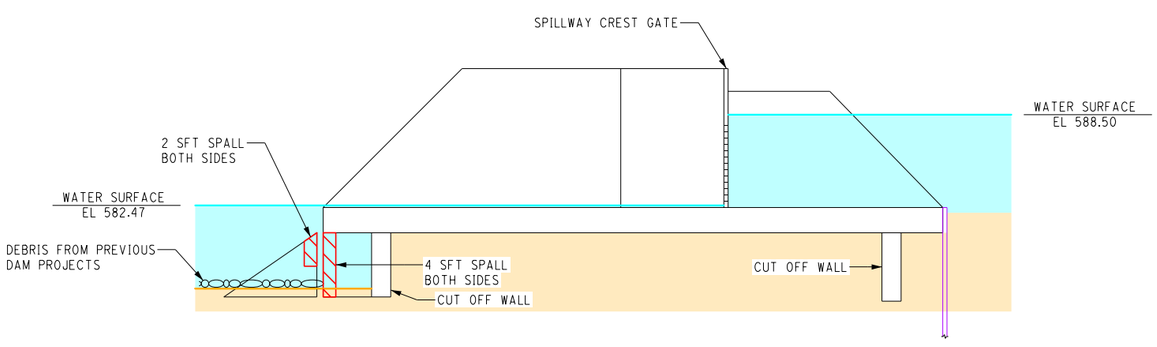

PIER 3 ELEVATION

LEGEND

-00.0	SOUNDING DEPTH FROM WATER SURFACE TO RIVER BOTTOM.
	RIPRAP
	SHEET PILING
	VERTICAL EXPOSURE OF FOOTING
	VERTICAL EXPOSURE OF TREMIE
	VERTICAL UNDERMINING BELOW FOUNDATION
	TIMBER/DEBRIS PILE

NOTE:

WATER SURFACE ELEVATION AT THE TIME OF DIVE INSPECTION WAS 588.50 ON 07/24/19. BENCH MARK ELEVATION WAS 582.30 TAKEN AT TOP OF SPILLWAY.

LEELANAU COUNTY

LELAND DAM

UNDERWATER DAM INSPECTION
CITY OF LELAND, MICHIGAN

DRAWING: SOUNDING PLAN	
STRUCTURE NO:	GLEG JOB NO: 1019-2-603
DRAWN BY: JLS	DATE: 07/24/19
CHECKED BY: ALT	FILE: 603 plan.dgn

GREAT LAKES ENGINEERING GROUP, LLC

West elevation of structure

East elevation of structure

Looking west off of structure

Looking east off of structure

Southwest quadrant

Southeast quadrant

Northwest quadrant

Northeast quadrant

South abutment, upstream end

South abutment, downstream end

North abutment, upstream end

North abutment, downstream end

Downstream end of south spillway

Elevation of south spillway

Downstream end of north spillway

Elevation of north spillway

Upstream left timber wall

Upstream left steel sheet wall

Upstream left abutment wall and spillway slab

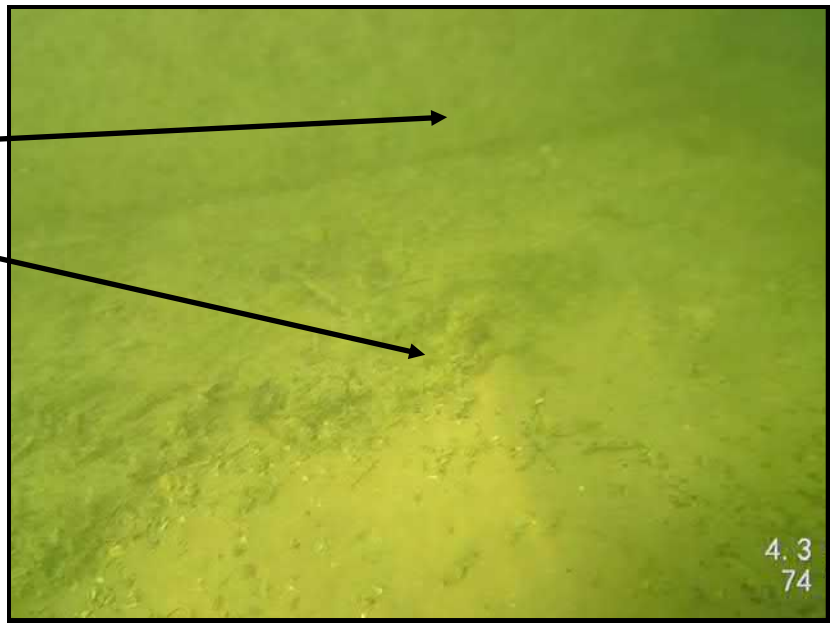

Upstream pier 1 and spillway slab

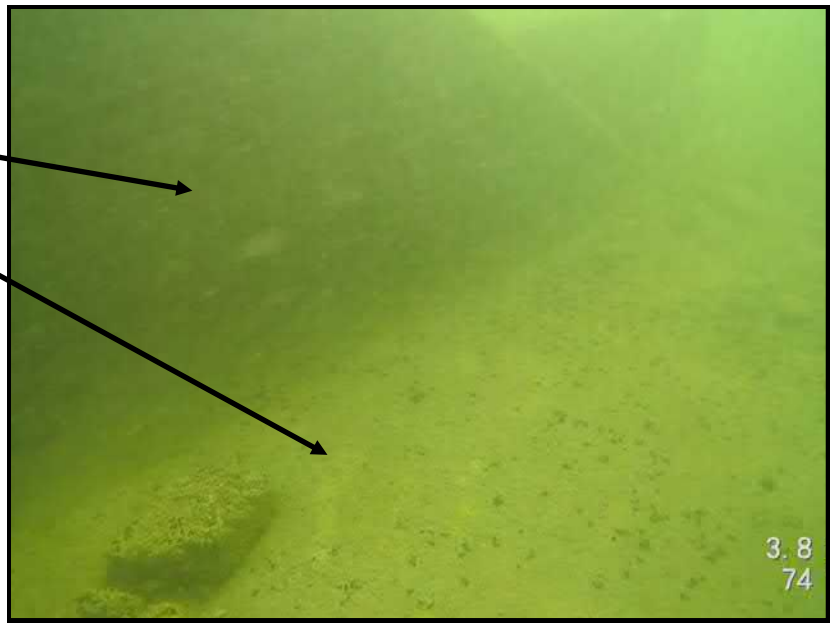

Upstream bay 2 crest gate

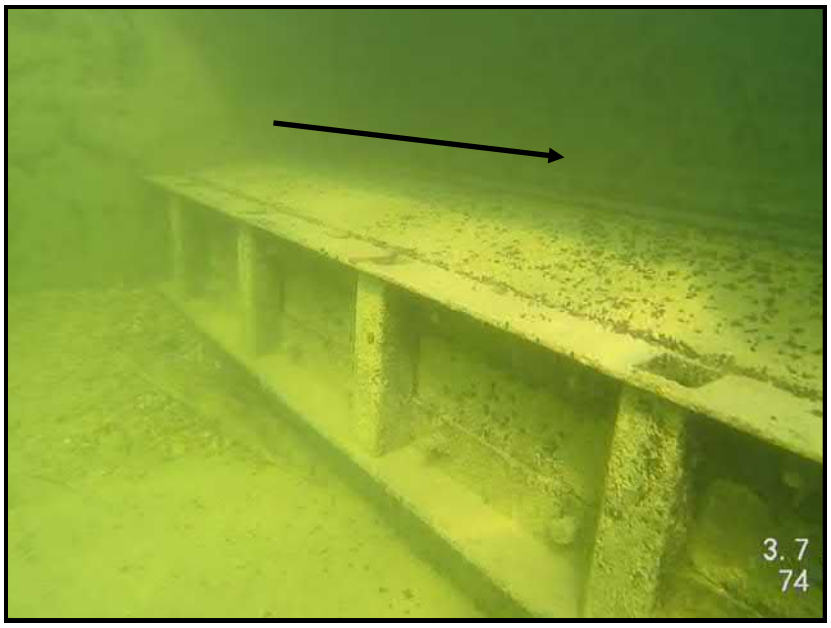

Upstream bay 3 crest gate

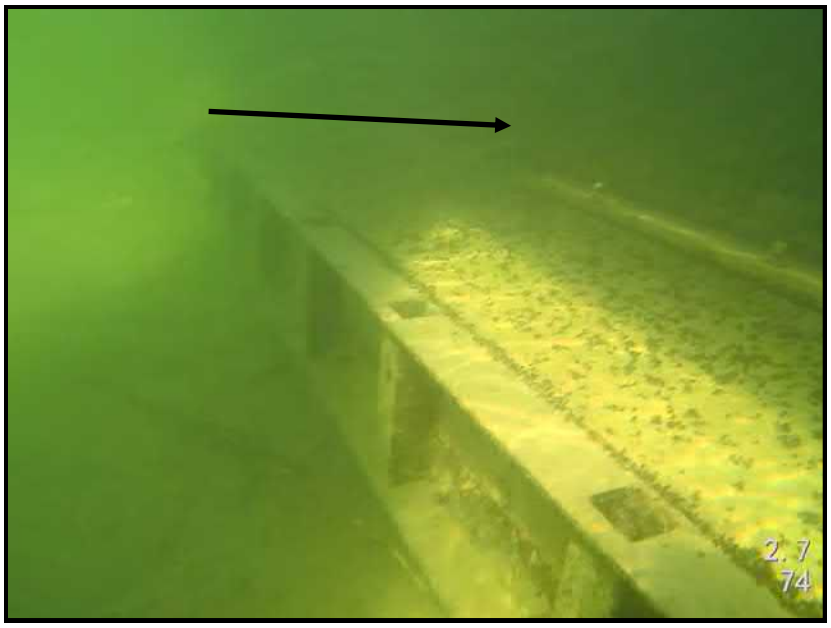

Upstream pier 3

Upstream right abutment

Upstream steel cutoff wall missing sheet

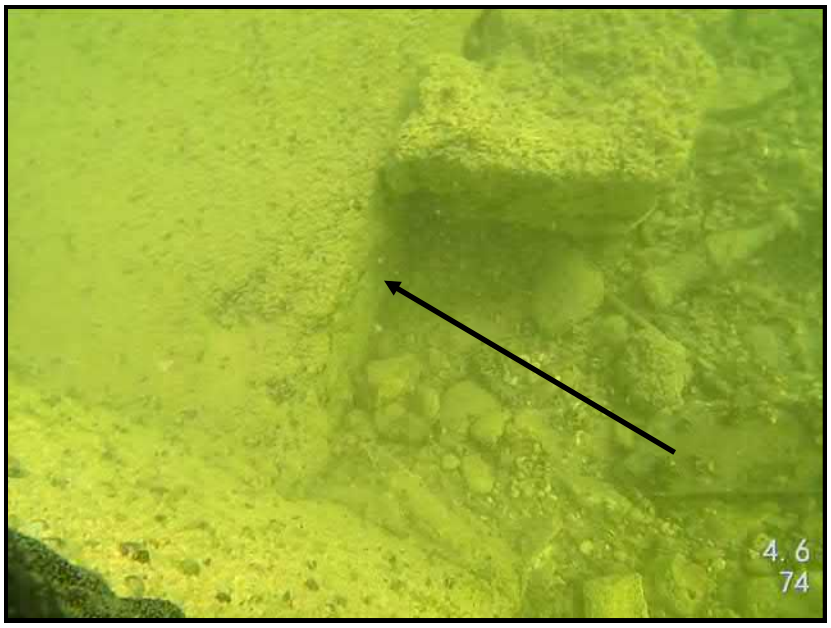

Upstream steel cutoff wall

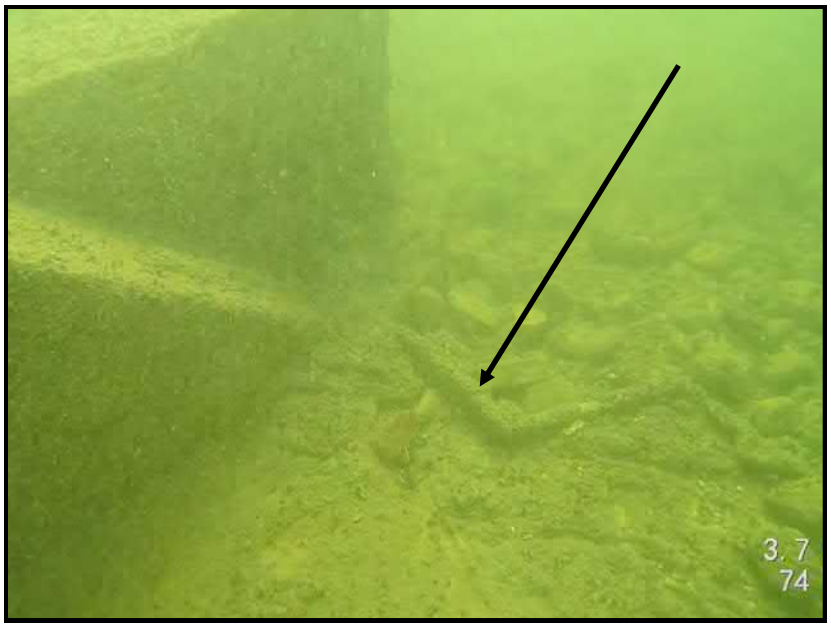

Downstream left abutment under spillway overhang

Downstream spillway overhang at left abutment

Undermined cutoff wall in bay 3

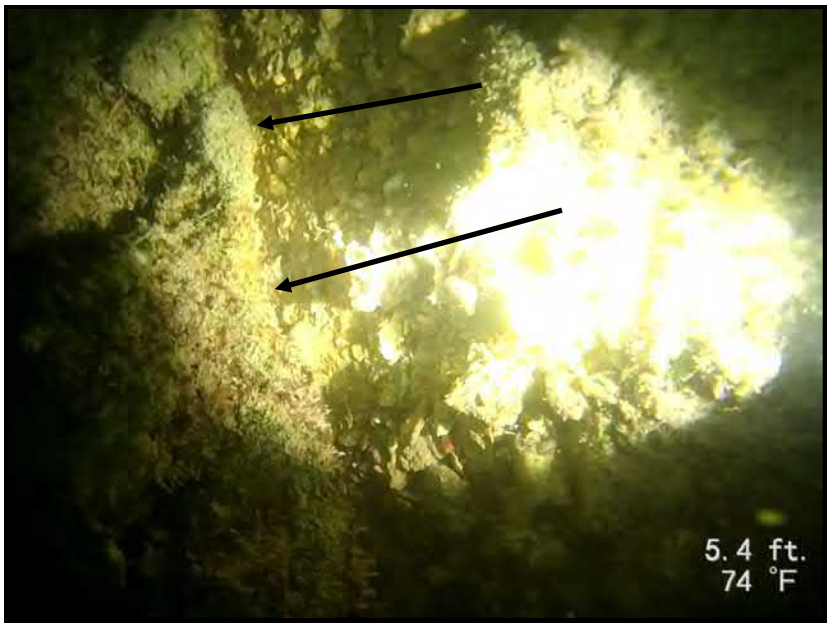

Downstream bay 3 missing I beam

Downstream scour wall pier 2

Downstream scour wall pier 3

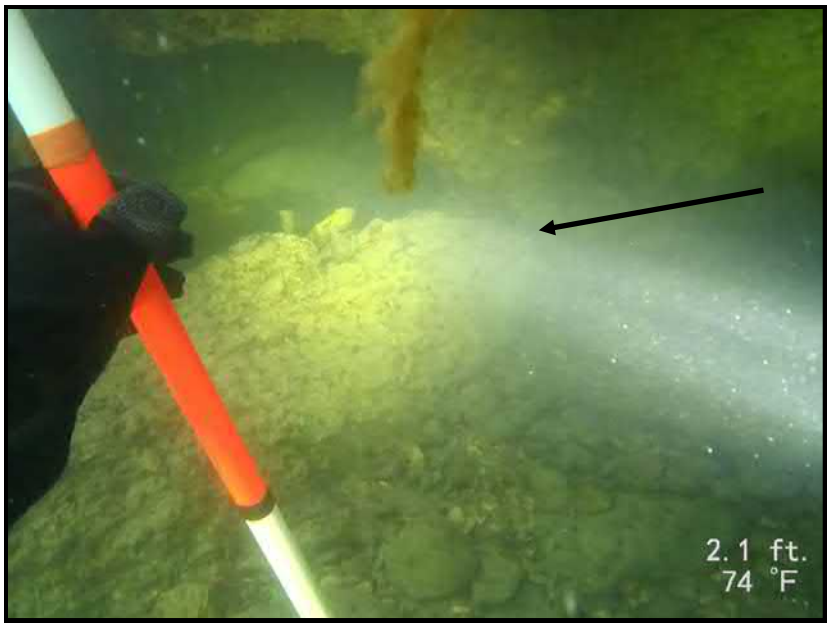

Downstream left timber wakefield wall downstream of the dam with exposed tips

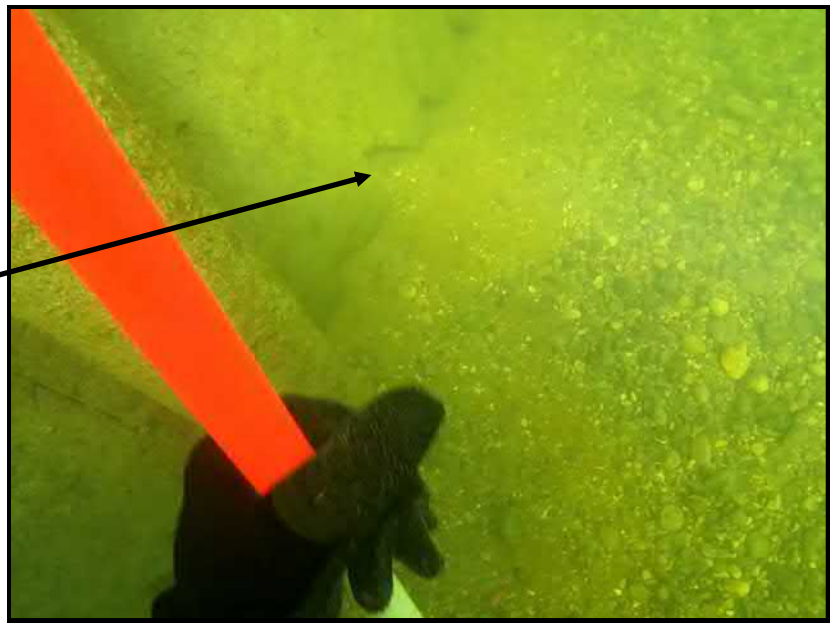

2012 Leland Dam Inspection Report

MI Dam ID. 510

Prepared for:

Leelanau County Board of Commissioners

By:

PREHODA CONSULTING

September 27, 2013

2012 Leland Dam Inspection Report

MI Dam ID. 510

Prepared for

Leelanau County Board of Commissioners

By

PREHODA CONSULTING

September 27, 2013

TABLE OF CONTENTS

1.0 Executive Summary 1
1.1 General 1

2.0 Background 2
2.1 History 2
2.2 Dam Description 2
2.3 Hazard Potential 3
2.4 Emergency Operation 3
2.5 Status of Previous Inspection Report Recommendations 3

3.0 Dam Safety Field Inspection 4
3.1 General 4
3.2 Field Observations 4

4.0 Evaluation 5
4.1 General 5
4.2 Structural Stability 5
4.3 Primary Spillway 5
4.4 Auxiliary Spillway 5
4.5 Seepage Evaluation 5
4.6 Leakage Evaluation 5
4.7 Spillway Hydraulics 5

5.0 Conclusions and Recommendations 6
5.1 General 6
5.2 Conclusions 6
5.3 Recommendations 6

APPENDICES

Appendix A	MDEQ Correspondence
Appendix B	Photographs
Appendix C	Plan, Elevation and Sections
Appendix D	Spillway Discharge Computations

I hereby certify that this report was prepared by me or under my direct supervision and that I am a duly registered Professional Engineer under the Laws of the State of Michigan.

Thomas F. Prehoda

Thomas F. Prehoda

Registration No. 42464 Date 09/27/2013

1.0 Executive Summary

1.1 General

Leland Dam is a classified as a "High Hazard" dam by the Michigan Department of Environmental Quality (MDEQ) Dam Safety Division and is regulated by Part 307, Inland Lake Levels, of the Natural Resources and Environmental Protection Act (NREPA), 1994 PA 451. The dam meets the size criteria specified in Part 315, Dam Safety, of the NREPA, Section 31518 requiring the owner of the dam to complete dam safety inspection reports once every three (3) years. This report presents the results of the Michigan Department of Environmental Quality (MDEQ) 2012 Dam Safety Inspection for the Leland Dam, MI Dam ID No. 510.

The Leland Dam is located in the town of Leland in Leelanau County, Michigan, and is operated by the Leelanau County Board of Commissioners. The dam provides control for the legal lake level control for Lake Leelanau. As a "High Hazard" potential dam, the design discharge for the dam set by the MDEQ is the 200-year flood event estimated to be 1,200 cfs. (See Appendix A) The dam was reconstructed in 2006-2007. The construction included: removal of the timber stoplog spillway bays; removal of the operator's deck; removal of the center spillway bay pier; repair of the left spillway abutment wall; construction of an operations control room in the right spillway bay; installation of an automated, hydraulically controlled crest gate; installation of an auxiliary flash-board system to facilitate dewatering for maintenance of the crest gate; construction of an auxiliary spillway with aluminum stoplogs in the left spillway bay; construction of a new operators/access deck. As part of the construction, steel sheet piling were driven to a depth of 15-feet below the spillway slab along the upstream face of the dam and along the right abutment. The sheet piling was installed to provide a coffer dam for construction and to mitigate existing seepage concerns.

The 2012 inspection found the dam to be in excellent condition. No deficiencies regarding structures, seepage, operation, and public safety were noted. Photographs taken during the inspection are included. (See Appendix B) Conclusions and recommendations made as a result of this inspection are as follows:

1.1.1 Conclusions

The following conclusions were made based on review of available information and the site inspection:

- The existing spillway structure is in excellent condition and can safely pass the 200-year flood event as required by the MDEQ.
- The automated, hydraulically controlled crest gate functions as designed.
- No seepage was noted downstream of the spillway structure.
- A floating cable system has been installed as a safety measure to alert boaters of the spillway structure and to restrict encroachment to the spillway.
- Minor spalling of the crest gate bearing grout pads was noted. However, the grout pads are not structurally significant.

1.1.2 Recommendations

The following recommendations are made based on review of available information and the site inspection:

1. Continue routine maintenance of the hydraulic crest gate and bearings.
2. Schedule future repair of gate bearing grout pads, as necessary.

3192 Lakeview Boulevard
Highland, MI 48356
CIVIL• GEOTECHNICAL• WATER RESOURCES
ANALYSIS/DESIGN/CONSTRUCTION
Phone/Fax: (248) 529-6448
E-mail: tfprehoda59@yahoo.com

2.0 Background

2.1 History

The Leland Dam was originally constructed in the mid 1800s as a timber and earth structure on what was called the Carp River (now Leland River) between Lake Michigan and Lake Leelanau. The dam was constructed to provide waterpower for a sawmill located adjacent to the structure. The original dam failed in 1908 and a new concrete dam was constructed along with a hydropower facility owned by Leland Light & Power.

The facility was sold to Michigan Public Service Company in the 1920's. In 1929, power generation was determined to be uneconomical and power generation ceased. In 1950 ownership of the facility was transferred to Consumers Power Company as part of a buy-out of Michigan Public Service Company. The powerhouse was removed and repair/modifications were made to the structure, including two new stoplog spillway bays where the powerhouse once stood.

In the 1960's Consumers sold the dam to Mr. J. Fred Hollinger along with the adjoining real estate. Mr. Hollinger constructed a restaurant on the north side and a lodge on the south side of the dam. A portion of the restaurant was built over Bay #4. Mr. Hollinger continued operation of the dam by use of stoplogs to control pool height of Lake Leelanau.

In the 1970's Mr. Hollinger offered to sell the dam to the Leelanau County Board of Commissioners. The Board of Commissioners hired an engineering firm in 1977 to conduct an inspection of the dam. The inspection report prepared by Brown and Root of Chicago, recommended a replacement of the dam. Based on this report, the Michigan Department of Natural Resources concluded that the dam was unsafe and should be repaired or abandoned. In 1978, the Leelanau County Board of Commissioners took over operation of the dam and a legal lake level for Lake Leelanau was established at 589.21 during the summer and 588.21 during the winter.

In 1979, Ayers, Lewis, Norris & May (ALNM) of Ann Arbor evaluated the structure. ALNM recommended repairs to the dam and construction of the repairs was performed in 1981 by Tom Shaw, Inc. The repairs included pumping grout under the spillway aprons, resurfacing of the walls and aprons, refurbishing the stoplog slots, and installation of new stoplogs.

In accordance with the Legal Lake Level Act, tri-annual inspections began in 1982 with an inspection report prepared by ALNM. Inspections were performed in 1985 by Gourdie Fraser and Associates, in 1988 and 1991 by the Leelanau County Board of Commissioners, and in 1994, 1997 and 2000 by Otwell Mawby, P.C. Minor repairs were performed as a result of these inspections.

The 2003 inspection was performed by Thomas F. Prehoda, P.E. of *A. RIELI & ASSOCIATES, LLC*. As a result of this inspection, spillway discharge capacity, difficulty removing/adding timber stoplogs, deterioration of the structure, and operational safety concerns, the Leelanau County Board of Commissioners decided to reconstruct/modify the dam. The Leland Dam was reconstructed/modified in 2006-2007.

The 2009 inspection was performed by James Coughlin, P.E., LLC, of Traverse City, MI.

2.2 Dam Description

The Leland Dam was reconstructed/modified in 2006-2007. Design of the reconstruction/modification was performed by *A. RIELI & ASSOCIATES, LLC*. The total length of the dam from outside to outside of the abutment walls is approximately 60 feet. The dam consists of an operations control room at the right (south) side of structure which houses the automated crest gate hydraulic controls, a 25'-10" long

3192 Lakeview Boulevard
Highland, MI 48356
CIVIL•GEOTECHNICAL•WATER RESOURCES
ANALYSIS/DESIGN/CONSTRUCTION
Phone/Fax: (248) 529-6448
E-mail: tfprehoda59@yahoo.com

automated/hydraulically controlled primary crest-gate spillway, and an 11'-8" long auxiliary spillway with aluminum stoplogs at the left (north) side of the structure. The left and right abutment walls are 35" thick, the intermediate spillway pier (Pier #1) is 21" thick, and the pier between the primary spillway and the operations control room (Pier #2) is 36" thick. The width of the dam is approximately 50 feet from the upstream apron slab edge to the downstream apron slab edge.

The primary spillway gate has an adjustable crest elevation to accommodate the legal summer level of El. 589.21 and winter level of El. 588.21. With the primary spillway gate in the full down position, the crest is at El. 584.87. The primary spillway gate is operated by dual hydraulic rams located in the operations control room. The gate hydraulics are automated and adjust the gate level to maintain preset headwater elevations via a headwater level sensor located inside the control room. The hydraulics can also be operated by manually overriding the automation. In the case of a power outage, auxiliary power can be provided by connecting a generator to the service box located on the electrical service power pole.

The auxiliary stoplog spillway has a fixed crest weir level of El. 587.21 with four (4) 6" aluminum stoplogs that allow the crest to be manually raised/lowered between El. 589.21 and El. 587.21.

Figure 1 illustrates the components of Leland Dam. (See Appendix C).

2.3 Hazard Potential

The Leland Dam is classified by the Michigan Department of Environmental Quality (MDEQ) Dam Safety Division as a "High Hazard" potential dam. The design discharge for the dam set by the MDEQ is the 200-year flood event estimated to be 1,200 cfs. The primary hydraulic crest gate and the auxiliary stoplog spillway are more than sufficient to pass the peak discharge of the design flood event.

2.4 Emergency Operation

The primary crest gate hydraulic controls can be operated in both automated and manual mode. In the case of a power outage, auxiliary power can be provided by connecting a generator to the service box located on the electrical service power pole. The gate can also be lowered manually without power via the hydraulic controls. The hydraulic system has two (2) hydraulic rams. The gate can be operated as designed using one (1) ram which allows for removal/repair of a ram as necessary. The hydraulic controls can also accommodate impact loading.

2.5 Status of Previous Inspection Report Recommendations

The 2009 Leland Dam Inspection Report was performed by James Coughlin, P.E., LLC, Traverse City, MI. Recommendations included in the May 2009 inspection report included the following:

1. Monitor the slight spalling on the center pier and on either side of the spillway walls.
2. Review and update the Emergency Action Plan per MDEQ requirements.

During the 2013 inspection, it was determined that the "slight spalling" referred to in the 2009 recommendations was not spalling. The author of this report provided construction inspection during the 2006-2007 construction and observed these marks created by the bobcat loader used to clean up demolition debris from the spillway apron slab.

The status of the Emergency Action Plan is not known to the author of this report.

3192 Lakeview Boulevard
Highland, MI 48356
CIVIL•GEOTECHNICAL•WATER RESOURCES
ANALYSIS/DESIGN/CONSTRUCTION
Phone/Fax: (248) 529-6448
E-mail: tfprehoda59@yahoo.com

3.0 Dam Safety Field Inspection

3.1 General

The dam safety field inspection was performed on May 21, 2012, by Thomas Prehoda, P.E. of *PREHODA CONSULTING*. Steve Christensen (Leelanau County Drain Commissioner) and Gerald Culman (Building and Grounds Coordinator, operator of the dam) were present to assist with the MDEQ dam safety inspection. All accessible portions of the dam were visually inspected. During the site inspection, the crest gate was raised to stop the flow of water for the inspection. Photographs taken during the inspection are included in Appendix B.

3.2 Field Observations

The dam is in excellent condition. Observations made during the field inspection are as follows:

3.2.1 Piers

The concrete piers were found to be in excellent condition. No cracking or spalling was noted.

3.2.2 Abutment Walls

The abutment walls were found to be in excellent condition. No cracking or spalling was noted.

3.2.3 Spillway Discharge Control

The hydraulic spillway crest gate was lowered and raised by manually overriding the automated controls. The gate functioned as designed. Minor spalling of the grout pads beneath the gate bearings was noted. However, the grout pads are not structurally significant.

3.2.4 Spillway Apron

The concrete spillway apron slab was found to be in excellent condition. No cracking or spalling was noted.

3.2.5 Operator/Access Deck

The operator/access deck was found to be in excellent condition.

3.2.6 Seepage

No seepage was observed beneath the spillway apron slab during the inspection.

3.2.7 Leakage

Minor leakage was observed through the crest gate seals and stoplogs. This is a normal condition and does not adversely affect the project.

3192 Lakeview Boulevard
Highland, MI 48356
CIVIL •GEOTECHNICAL• WATER RESOURCES
ANALYSIS/DESIGN/CONSTRUCTION
Phone/Fax: (248) 529-6448
E-mail: tfprehoda59@yahoo.com

4.0 Evaluation

4.1 General

The structure was inspected on May 21, 2012 by Thomas F. Prehoda, PE. The project structure and operational components were found to be in excellent condition. No concerns were noted regarding the overall stability, condition, or safety of the project.

4.2 Structural Stability

Overall the structure is in excellent condition. A stability analysis was not performed as part of this evaluation. However; there are no visible signs of structural instability.

4.3 Primary Spillway

The primary hydraulics crest gate spillway is in excellent condition. The gate hydraulics were operated in automatic and manual mode during the inspection and were found to function as designed. Minor spalling was observed on the spillway gate bearing grout pads. However, the grout pads are not structurally significant.

4.4 Auxiliary Spillway

The auxiliary stoplog spillway is in excellent condition.

4.5 Seepage Evaluation

Prior to the 2006-2007 reconstruction/modification to the Leland Dam substantial leakage was observed beneath the apron slab of spillway Bay #4. As part of reconstruction/modification work steel sheet piling was driven along the upstream face of the dam and along the left embankment to form a coffer dam. The sheet piling was driven 15 feet below the spillway apron slab. After construction the sheet piling was left in place and cut off at the top of the apron slab to provide a seepage cut-off.

No seepage was observed during the inspection.

4.6 Leakage Evaluation

Minor leakage was observed through the primary spillway gate seals and through the auxiliary spillway stoplogs. This is a normal condition and does not adversely affect the project.

4.7 Spillway Hydraulics

The spillway was completely reconstructed in 2006-2007. The existing spillway configuration consists of a 25'-10" long automated/hydraulically controlled primary crest gate spillway and an 11'-8" long auxiliary spillway with aluminum stoplogs in the left spillway bay. The dam has sufficient spillway discharge capacity to accommodate the 200-year flood event discharge capacity requirement of 1,200 cfs required by the MDEQ. With the primary spillway crest gate fully down and the auxiliary spillway stoplogs removed, the structure can pass the 200-year flood event at a headwater level of El. 590.27. With the headwater at the top of pier El. 591.5 the structure can pass 1,671.9 cfs. Spillway discharge computations are included in Appendix D.

3192 Lakeview Boulevard
Highland, MI 48356
CIVIL•GEOTECHNICAL•WATER RESOURCES
ANALYSIS/DESIGN/CONSTRUCTION
Phone/Fax: (248) 529-6448
E-mail: tfprehoda59@yahoo.com

5.0 Conclusions and Recommendations

5.1 General

The 2012 inspection found the dam to be in excellent condition. No deficiencies regarding structures, seepage, operation, and public safety were noted. Conclusions and recommendations made as a result of this inspection are as follows:

5.2 Conclusions

The following conclusions were made based on review of available information and the site inspection:

- The existing spillway structure is in excellent condition and can safely pass the 200-year flood event as required by the MDEQ.
- The automated, hydraulically controlled crest gate functions as designed.
- No seepage was noted downstream of the spillway structure.
- A floating cable system has been installed as a safety measure to alert boaters of the spillway structure and to restrict encroachment to the spillway.
- Minor spalling of the crest gate bearing grout pads was noted. However, the grout pads are not structurally significant.

5.3 Recommendations

The following recommendations are made based on review of available information and site inspection observations:

1. Continue routine maintenance of the hydraulic crest gate and bearings.
2. Schedule future repair of gate bearing grout pads as necessary.

3192 Lakeview Boulevard
Highland, MI 48356
CIVIL •GEOTECHNICAL• WATER RESOURCES
ANALYSIS/DESIGN/CONSTRUCTION
Phone/Fax: (248) 529-6448
E-mail: tfprehoda59@yahoo.com

APPENDICES

Appendix A

MDEQ Correspondence

RICK SNYDER
GOVERNOR

STATE OF MICHIGAN
DEPARTMENT OF ENVIRONMENTAL QUALITY
LANSING

DAN WYANT
DIRECTOR

March 11, 2013

CERTIFIED MAIL

Leelanau County Drain Commissioner
P.O. Box 205
112 West Phillip
Lake Leelanau, Michigan 49653

ATTENTION: Mr. Steve Christensen

Dear Mr. Christensen:

SUBJECT: Overdue Inspection Notice: Leland Dam, Dam ID 510

We are writing to advise you that our records indicate that the Leland Dam is overdue for inspection. This dam is regulated by Part 307, Inland Lake Levels, of the Natural Resources and Environmental Protection Act, 1994 PA 451, as amended (NREPA), and meets the size criteria specified in Part 315, Dam Safety, of the NREPA. The dam is classified as a significant hazard potential dam per Part 315 and therefore requires a dam safety inspection reports be prepared every four years. However, Part 307 requires dam safety inspection reports once every three years. Our records indicate the last inspection of your dam was completed on May 17, 2009.

In order to return to compliance, inspection reports for your dam must be submitted to this office. Inspection reports must be prepared, signed, and sealed by a professional engineer licensed in Michigan and must include:

1. An evaluation of the dam's condition, spillway capacity, operational adequacy, and structural integrity.

2. A determination of whether deficiencies exist that could lead to the failure of the dam, including but not limited to potential seepage problems, internal erosion, surface erosion, embankment stability problems, and structural deterioration.

3. Recommendations for maintenance, repair, and alterations of a dam as are necessary to eliminate any deficiencies.

A list of consulting engineers offering services in dam safety may be found on our website at:

www.michigan.gov/damsafety

Copies of Part 307 and 315 and its administrative rules may be found there, as well. Printed copies are also available upon request.

By April 8, 2013, please advise this office of your intentions regarding this matter.

If you have any questions regarding this matter, please contact Mr. James Pawloski, P.E., at 989-705-3443; or you may contact me.

Sincerely,

Byron Lane, P.E., Chief
Hydrologic Studies and Dam Safety Unit
Water Resources Division
517-241-9862

cc: Mr.James Pawloski, P.E., DEQ

Subject:	RE: flood or low flow discharge request (ContentID - 168812)
From:	deq-wrd-qreq (deq-wrd-qreq@michigan.gov)
To:	tfprehoda59@yahoo.com;
Date:	Wednesday, October 2, 2013 5:22 PM

This reply is being sent via email only.

We have estimated the flood frequency discharges requested in your email of September 26, 2013 (Process No. 20130458), as follows:

Tributary to Lake Michigan at Leland Dam, Dam ID 510, Section 9, T30N, R12W, Leland Township, Leelanau County, has a total drainage area of 140 square miles and a contributing drainage area of 130 square miles. The design discharge for this dam is the 0.5% chance (200-year) flood. The 0.5% chance peak flow is estimated to be 1200 cubic feet per second. (Watershed Basin No. 28L Platte (Lake)).

Please include a copy of this letter with your inspection report or any subsequent application for permit. These estimates should be confirmed by our office if an application is not submitted within one year. If you have any questions concerning the discharge estimates, please contact Ms. Susan Greiner, Hydrologic Studies and Dam Safety Unit, at 517-284-5579, or by email at: GreinerS@michigan.gov. If you have any questions concerning the hydraulics or the requirements for the dam safety inspection report, please contact Mr. Jim Pawloski of our Dam Safety Program at 989-370-1528, or by email at: PawloskiJ@michigan.gov.

-----Original Message-----
From: tfprehoda59@yahoo.com [mailto:tfprehoda59@yahoo.com]
Sent: Thursday, September 26, 2013 3:42 PM
To: deq-wrd-qreq
Subject: flood or low flow discharge request (ContentID - 168812)

Requestor: Thomas F. Prehoda
Company: Prehoda Consulting
Address: 3192 Lakeview Blvd.
City: Highland, MI
Zip: 48356
Phone: (248) 529-6448
Date: September 26, 2013
F0.5percent: Yes
ContactAgency: Other
ContactPerson:
Watercourse: Leelanau River, Leland Dam, MDEQ ID 510
LocalName: Lake Leelanau Outlet
CountyLocation: Leelanau
CityorTownship: Leland
Section: 9
Town: T30N
Range: R12W
Location: Leland Dam is located on the Leland River which is the outlet for Lake Leelanau
FFR1: Dam

Appendix B

Photographs

Leland Dam
MDEQ Dam Safety Inspection Photos
May 21, 2012

Photo 1. Upstream (US) view of Leland Dam spillway structure.

Photo 2. Downstream (DS) view of Leland Dam spillway structure. Primary crest gate spillway on the left. Auxiliary stoplog spillway on the right.

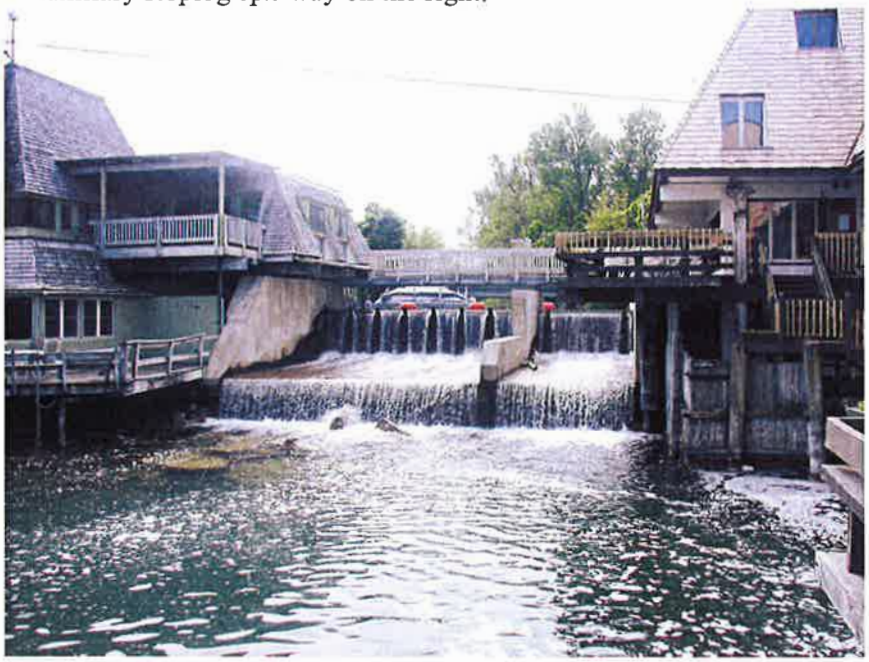

3192 Lakeview Boulevard
Highland, MI 48356

CIVIL • GEOTECHNICAL • WATER RESOURCES
ANALYSIS/DESIGN/CONSTRUCTION

Phone/Fax: (248) 529-6448
E-mail: tfprehoda59@yahoo.com

Photo 3. DS view of primary crest gate spillway and operators/access bridge. Gate at legal summer level.

Photo 4. DS view of primary crest gate and operators/access bridge. Gate up.

3192 Lakeview Boulevard
Highland, MI 48356
CIVIL • GEOTECHNICAL • WATER RESOURCES
ANALYSIS/DESIGN/CONSTRUCTION
Phone/Fax: (248) 529-6448
E-mail: tfprehoda59@yahoo.com

Photo 5. View of spalled grout gate bearing pad.

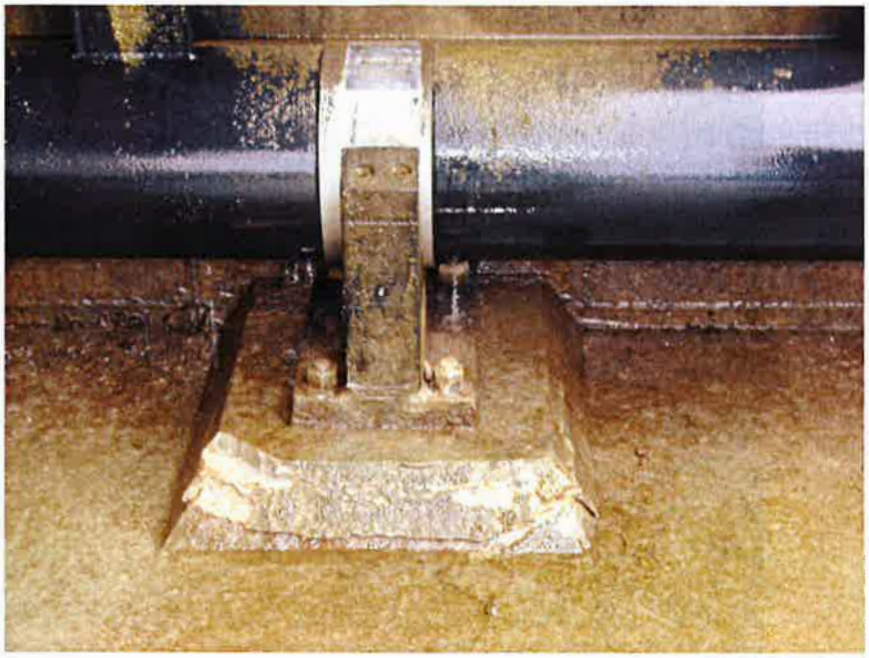

Photo 6. DS view of auxiliary stoplog spillway and access bridge.

3192 Lakeview Boulevard
Highland, MI 48356
CIVIL • GEOTECHNICAL • WATER RESOURCES
ANALYSIS/DESIGN/CONSTRUCTION
Phone/Fax: (248) 529-6448
E-mail: tfprehoda59@yahoo.com

Photo 7. View of seepage flow from under DS right (south) side of spillway slab, 2003 photo.

Photo 8. View from under DS right (south) side of spillway slab, 2012 photo. No seepage.

3192 Lakeview Boulevard
Highland, MI 48356
CIVIL • GEOTECHNICAL • WATER RESOURCES
ANALYSIS/DESIGN/CONSTRUCTION
Phone/Fax: (248) 529-6448
E-mail: tfprehoda59@yahoo.com

Photo 9. View of automated control panel, hydraulic system, dual rams, gate torque arms and end bearing, and headwater sensor in operations control room.

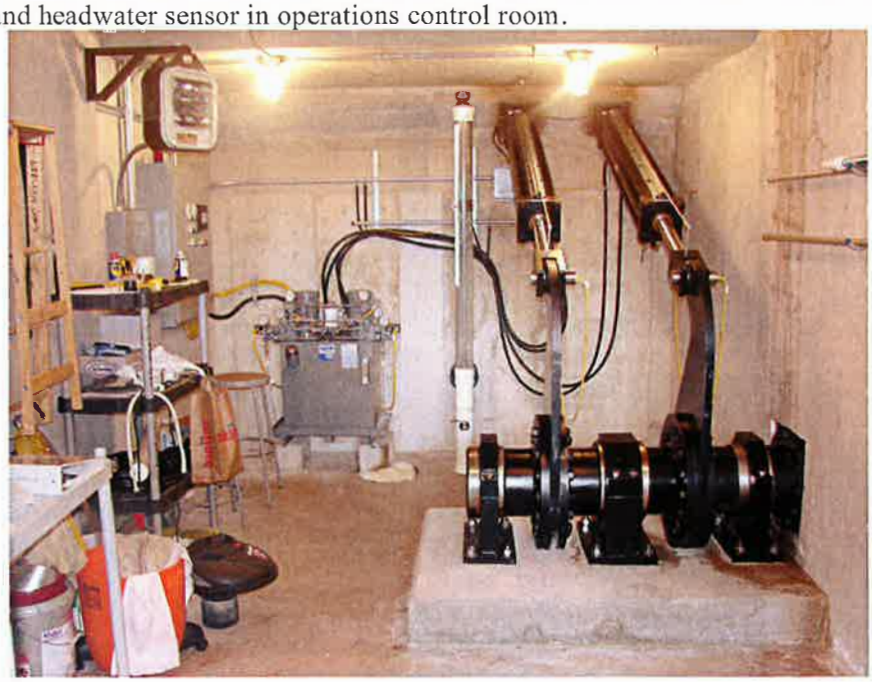

Photo 10. View of hydraulic system, dual rams, gate torque arms and end bearing, and headwater sensor in operations control room.

3192 Lakeview Boulevard
Highland, MI 48356
CIVIL • GEOTECHNICAL • WATER RESOURCES
ANALYSIS/DESIGN/CONSTRUCTION
Phone/Fax: (248) 529-6448
E-mail: tfprehoda59@yahoo.com

Appendix C

Plan, Elevation and Sections

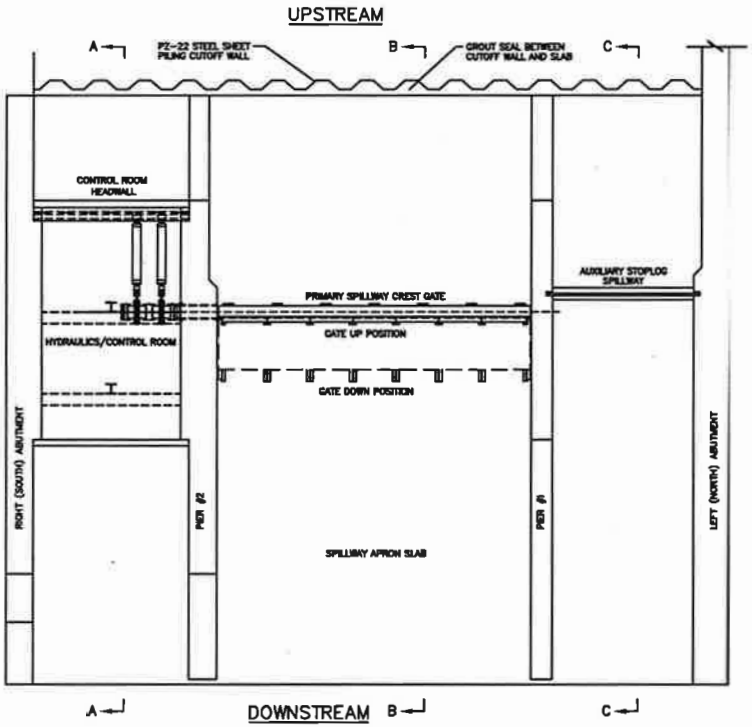

PLAN: SPILLWAY STRUCTURE

0 5 10
SCALE IN FEET

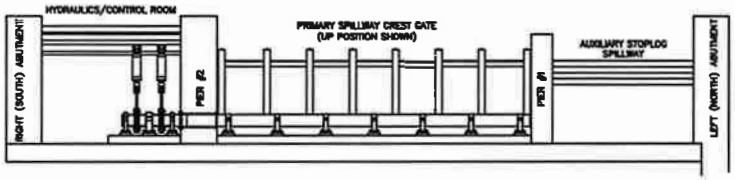

ELEVATION: SPILLWAY STRUCTURE

0 5 10
SCALE IN FEET

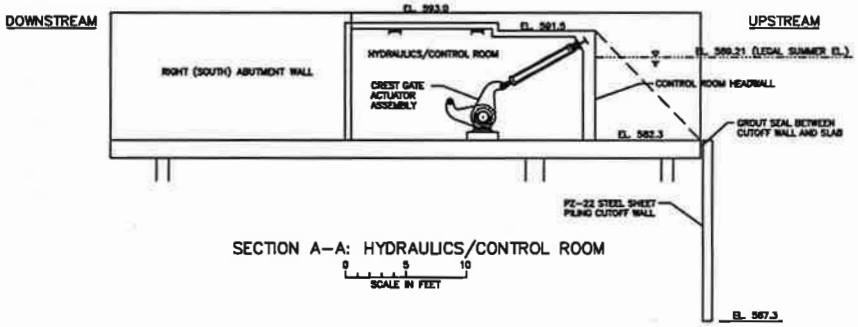

SECTION A–A: HYDRAULICS/CONTROL ROOM

0 5 10
SCALE IN FEET

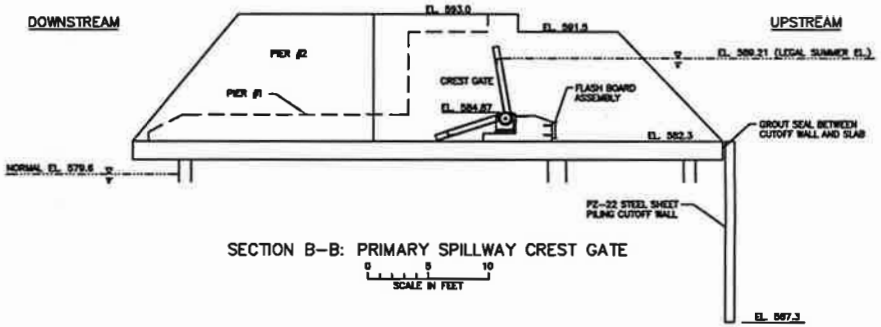

SECTION B–B: PRIMARY SPILLWAY CREST GATE

0 5 10
SCALE IN FEET

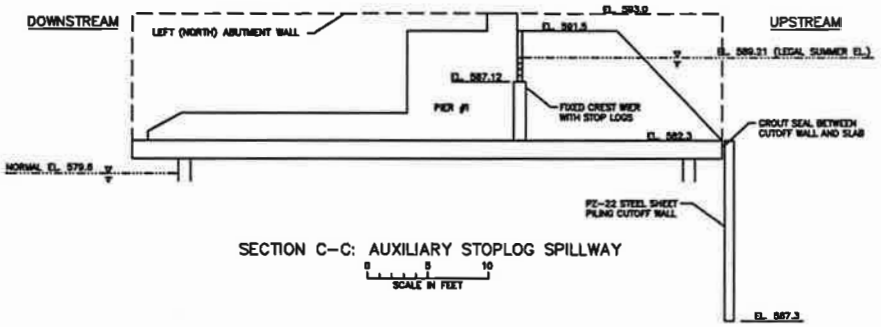

SECTION C–C: AUXILIARY STOPLOG SPILLWAY

0 5 10
SCALE IN FEET

PREHODA CONSULTING
3192 Lakeview Blvd.
Highland, MI 48356
Phone/Fax: (248)929-4448
E-mail: tprehoda@hydro.com

FIGURE 1
LELAND DAM – MDEQ ID 510
PLAN, ELEVATION & SECTIONS

Appendix D

Spillway Discharge Computations

Leland Dam

MDEQ ID 510

Spillway Discharge Computation

200-Year Design Discharge (1,200 cfs)

Disch. Coef. = C =	3.25		
L gate (ft) = L1 =	25.833		
L weir (ft) = L2 =	11.667		
HW El. (ft) = Hhw =	590.270		
Gate Crest El. (ft) = Hg =	584.870		
Weir Crest El. (ft) = Hw =	587.210		
Hhw-Hg = H1 =	5.4	L1eff =	24.753
Hhw-Hw = H2 =	3.06	L2eff =	11.055
Gate Discharge (cfs) =	1009.50		
Weir Dicharge (cfs) =	192.31		
Total Discharge (csf) =	1,201.8		

Leland Dam

MDEQ ID 510

Spillway Discharge Computation

Maximum Discharge (Top of Pier El. 591.5)

Disch. Coef. = C =	3.25		
L gate (ft) = L1 =	25.833		
L weir (ft) = L2 =	11.667		
H pool (ft) = Hp =	591.500		
H gate (ft) = Hg =	584.870		
H weir (ft) = Hw =	587.210		
Hp - Hg = H1 =	6.630	L1eff =	24.507
Hp - Hw = H2 =	4.290	L2eff =	10.809
Gate Discharge (cfs) =	1359.72		
Weir Dicharge (cfs) =	312.13		
Total Discharge (csf) =	1,671.9		

January 29, 2018

Steve Christensen
Leelanau County Drain Commissioner
P.O. Box 205
112 West Phillip
Lake Leelanau, MI 49653

RE: Leland Dam, Dam ID 510,
Field Inspection Review Meeting
Leelanau County, Michigan

Dear Steve,

Spicer Group was requested to provide an onsite review and evaluate the deterioration of the downstream side of the Leland dam's left raceway abutment wall (looking downstream). The purpose of the onsite inspection was to determine the extents and methods required to make repairs to the dam and if coordination with planned deck repairs at the adjacent Falling Waters Lodge would be required.

BACKGROUND

The Leland Dam is in the town of Leland in Leelanau County, Michigan, and is operated by the Leelanau County Drain Commissioner. The dam was reconstructed in 2006-2007. The construction included repairs of the left spillway abutment wall and construction of an operations control room in the right spillway bay with the installation of an automated, hydraulically controlled crest gate. As part of the construction, steel sheet piling was driven to a depth of 15-feet below the spillway slab along the upstream face of the dam and along the right abutment. The sheet piling used for the construction cofferdam was left in place to help concerns with seepage.

SITE REVIEW

Spicer coordinated and performed a site review on December 6, 2017. The following people were on-site during this meeting:

Steve Christensen, Leelanau County Drain Commissioner
Steve Haugen, County Building Official/Inspector
Jerry Culman, Dam Operator
Rusty Friedle, Fisher Contracting
Shawn Middleton, Spicer Group
Rich Kathrens, Spicer Group

The main area of interest for the site visit was to complete a visual inspection of the downstream left spillway abutment wall. The repairs completed during the 2006-2007 reconstruction project were located along the north face (spillway side) the left abutment wall. The area inspected during this site visit was near the downstream end of the spillway slab and the south face of the left abutment wall. Access to the control room was also provided where previous construction records and photo documentation was reviewed.

Looking Upstream at Auxiliary Spillway

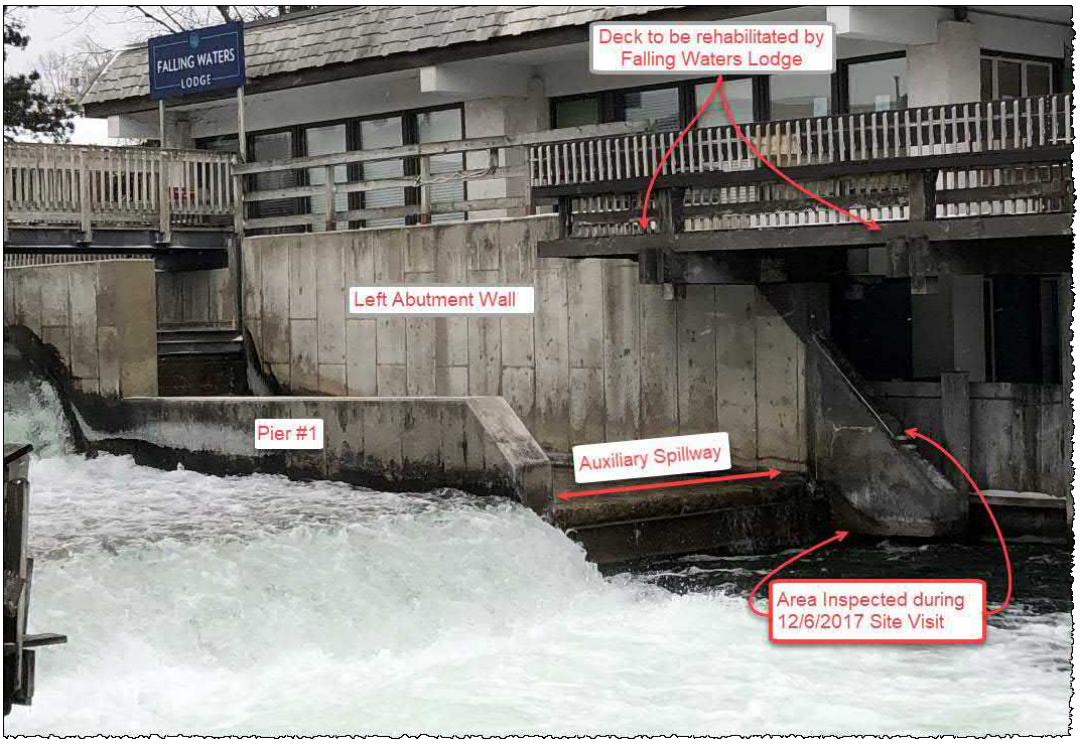

Looking South at Auxiliary Spillway, Left Abutment Wall

OBSERVATIONS

The Left Abutment wall consists of a cast in-place concrete cast in-place wall approximately 24" thick. Based on a review of the records, it is estimated that the original construction of this wall was around 1950. The left abutment wall is directly adjacent to the Falling Waters Lodge and serves as the dam's south wall for the auxiliary spillway. There is a portion of the Falling Waters Lodge's timber deck that is supported by the wall.

The north face (spillway side) of the wall is in good condition with minor areas of deterioration noted near the end of the spillway. Most of the north face was resurfaced during the rehabilitation project.

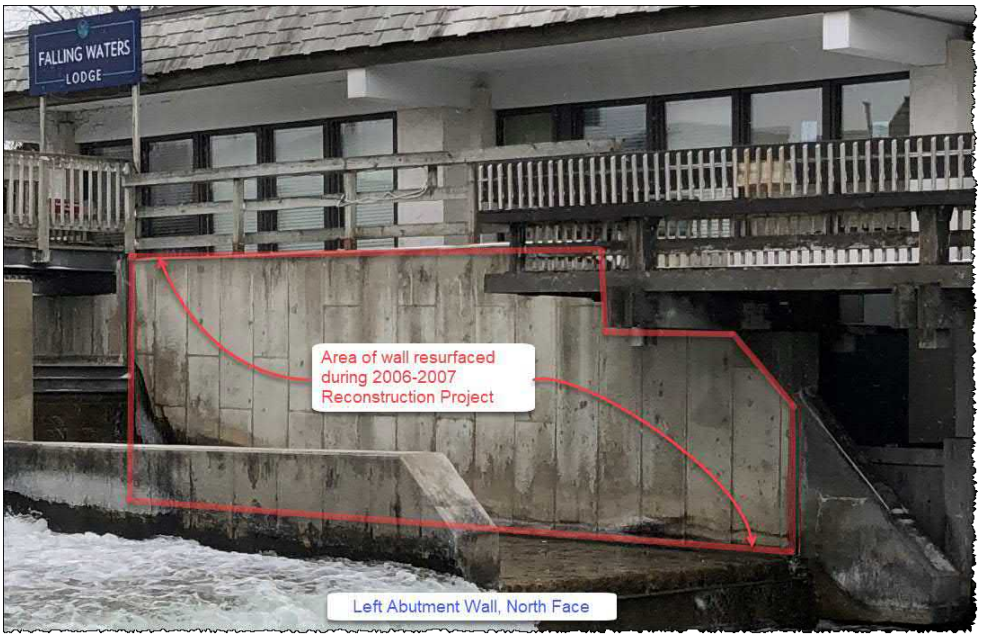

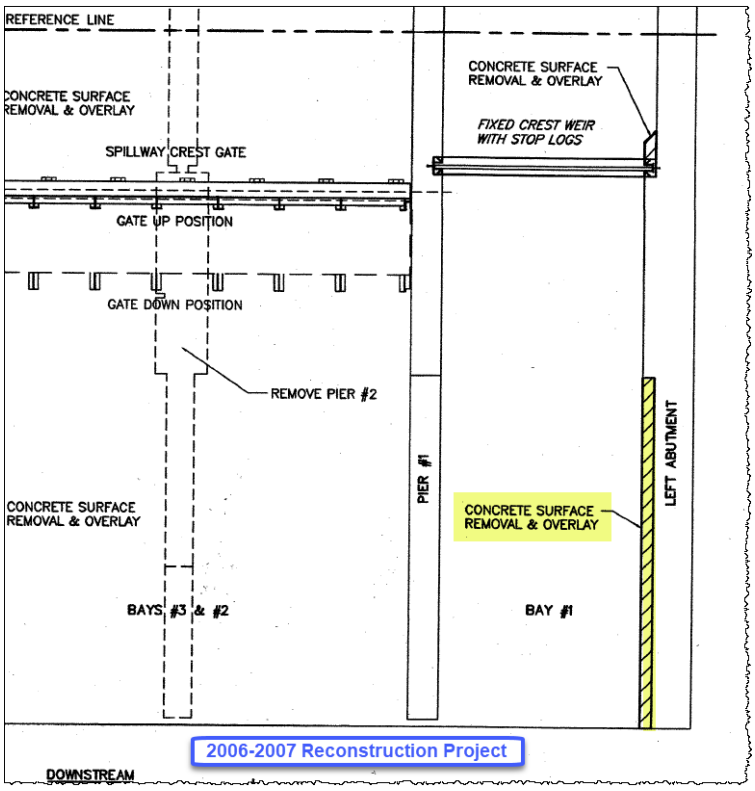

The south face (Lodge Side) of the left abutment exhibited surface cracking and efflorescence. This cracking appeared to be only surface defects and the wall is in sound condition.

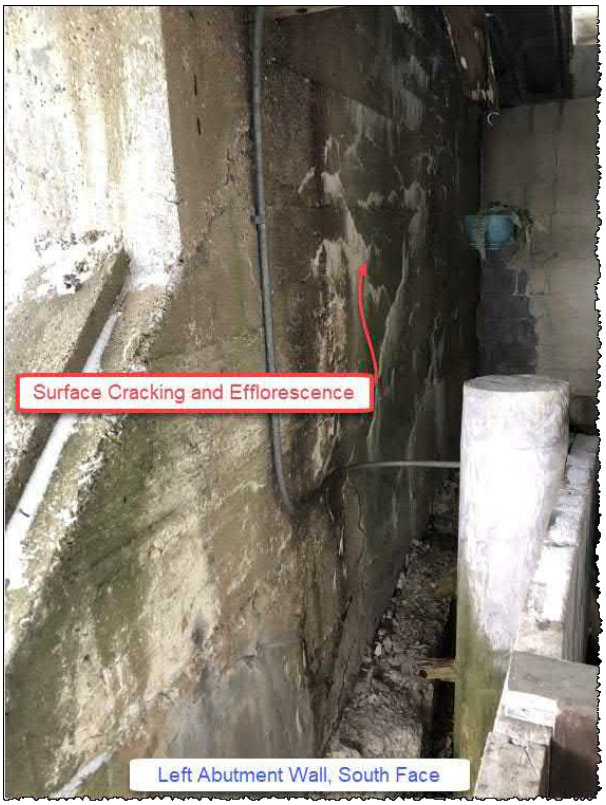

There is a section of the wall that is perched over the downstream end of the spillway. This portion of the wall did not have repairs completed during 2006-2007 rehab project. This portion of the wall appears to be in sound condition with minor cracking on both the north and south faces. There were areas observed near the waterline and below that may exhibit deterioration. This area could not be inspected during this site visit and would require a diver to further investigate the overall condition.

RECOMENDATIONS
During the meeting anticipated repairs and the methods needed to complete these repairs were discussed. Anticipated repairs included minor concrete surface patching to the south side of the left abutment wall. In addition, there may be repairs required along the downstream side of the spillway near the perched end of the left abutment which may include sheet piling, underpinning, and concrete fill.

Coordination with Falling Waters Lodge Deck Repairs
Access to complete the assumed repairs and coordination with the Falling Waters Lodge deck rehabilitation was discussed during the meeting. The participants agreed the minor repairs that may be needed near the left abutment wall could be completed independently of the Falling Waters Lodge deck project. This assumes that the supports for the existing deck would remain and access to the left abutment wall would not be limited by the deck repairs.

Underwater Inspection
To determine the extents of any repairs an underwater inspection should be conducted. The following recommendation should be completed to determine the extent of repairs to the left abutment wall:

- Underwater Inspection: Estimated Inspection Fee: $2,500

  Complete an underwater inspection with a diver along downstream side of the left abutment wall to determine the extent of the deterioration. Due to the cost of mobilization of a diving company it is recommended a complete underwater inspection be completed for both the upstream and downstream sides of the dam.

  A complete underwater inspection can verify the stability of the repairs completed during the 2006-2007 project and this data can be included in the next dam safety inspection report.

After completion of the underwater inspection limits for repairs can be determined and construction estimates and drawings can be prepared

Let us know if you have any questions or need additional information.

Sincerely,

Richard D. Kathrens, P.E.
Project Manager

SPICER GROUP, INC
302 River Street
Manistee, MI 49660
Cell: (517) 749-4274
E-mail: rich.kathrens@spicergroup.com

Copy: SGI File