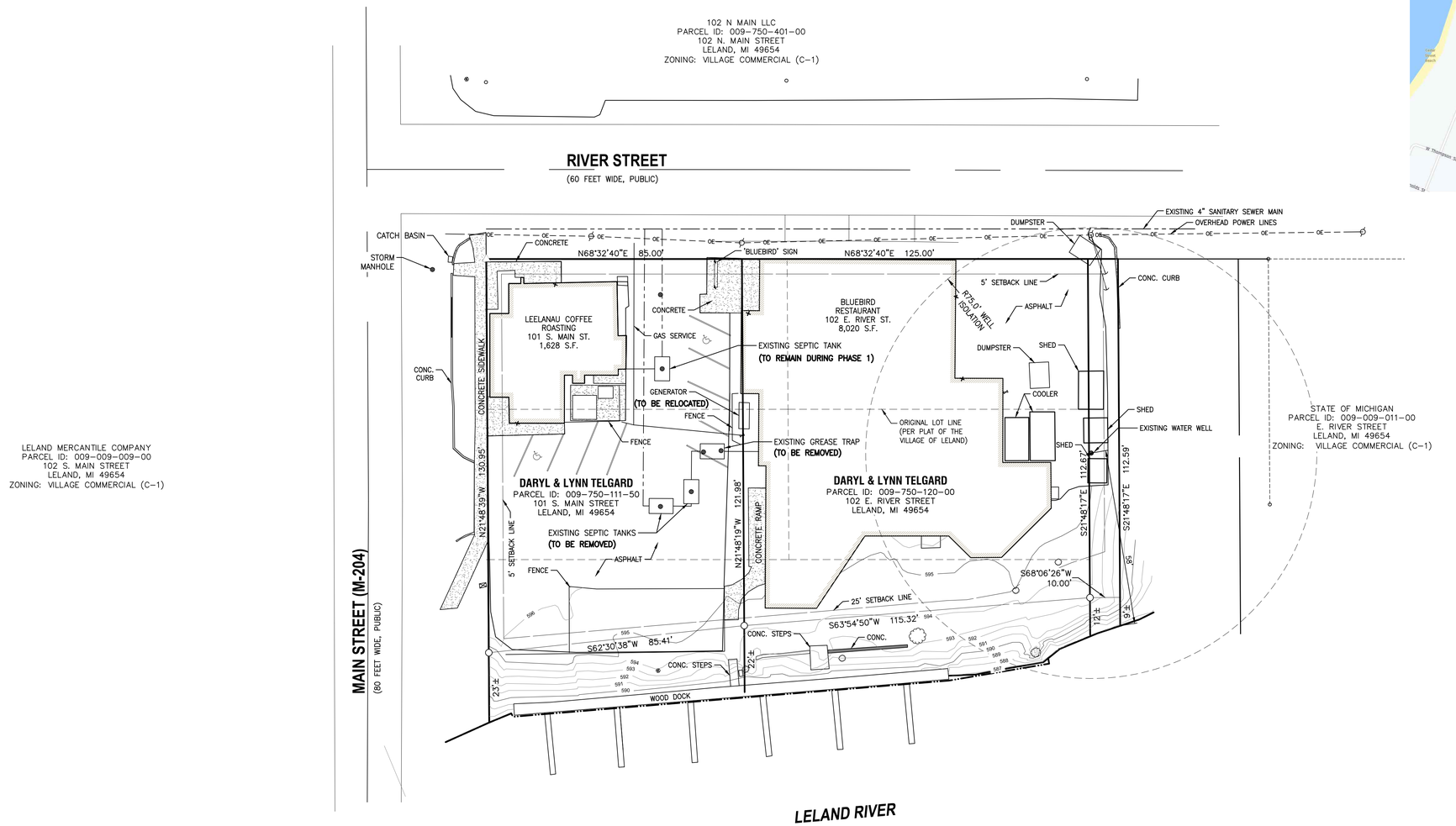

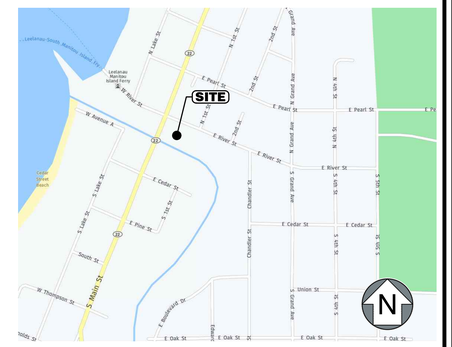

SITE LOCATION MAP

NOT TO SCALE

FLOOD NOTE:

By graphic plotting only, this property is in Zone(s) "X" of the Flood Insurance Rate Map, Community Panel No. 26089C0250D which bears an effective date of 08/28/18 and is NOT in a Special Flood Hazard Area. It should be noted that Lake Leelanau, located upstream on the Leland River, has a 1% chance base flood elevation reported as 590 feet (NAVD 88).

Know what's **below.** **Call** before you dig.

THE LOCATION OF THE EXISTING UTILITIES, AS SHOWN ON THIS PLAN, ARE APPROXIMATE ONLY. IT SHALL BE THE RESPONSIBILITY OF THE CONTRACTOR TO VERIFY ACTUAL LOCATION AND DEPTH OF ALL EXISTING UTILITIES. THE OWNER AND THE SURVEYOR SHALL NOT BE RESPONSIBLE FOR ANY OMISSION OR VARIATION FROM THE LOCATION SHOWN. THE CONTRACTOR SHALL NOTIFY 'MISS DIG' AT (800) 482-7171 OR 811 THREE (3) WORKING DAYS PRIOR TO THE START OF CONSTRUCTION.

0' 20' 40'
SCALE: 1" = 20'

PLANS PREPARED BY:
LANDTECH
Professional Surveying & Engineering
P.O. BOX 193
1275 McGREGOR WAY
GRAWN, MI 49637
231.943.0050
www.landtechps.com

STATE OF MICHIGAN
JOHN W. URBAIN
ENGINEER
NO. 62010450[illegible]
PROFESSIONAL ENGINEER
09/27/2023

REV	DESCRIPTION	DATE	BY
1	LAND USE	09.27.2023	JWU

PROJECT
Bluebird Redevelopment
102 E. River Street
Leland, MI 49654

SHEET TITLE
Existing Conditions

PROJECT NO.:	22402006
DATE DRAWN:	12.13.2022
DRAWN BY:	JWU
CHECKED BY:	PGP

SHEET NUMBER
C1.0

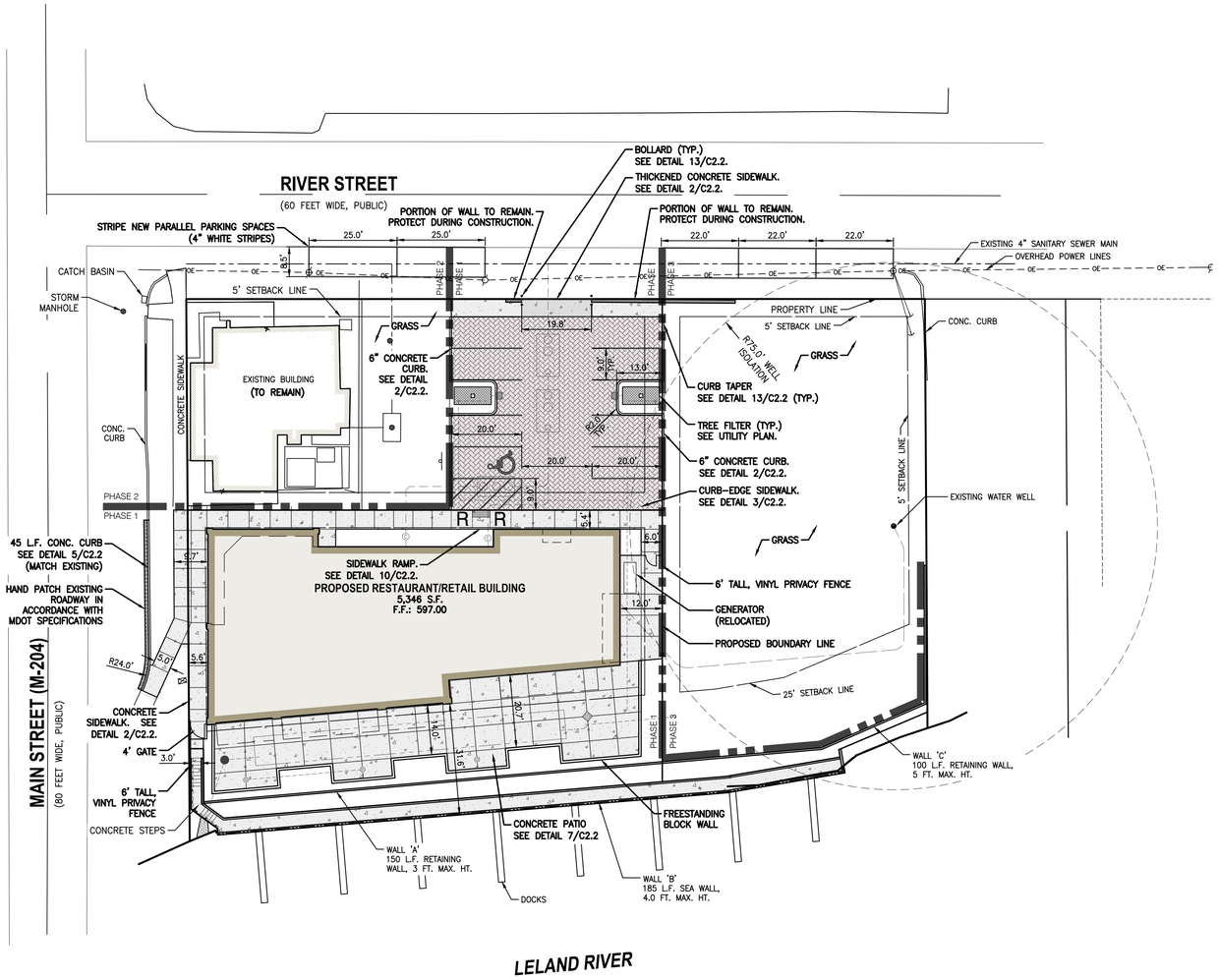

PROJECT INFORMATION

PROPERTY OWNER/APPLICANT

DARYL & LYNN TELGARD
9972 WEST BAYSHORE DRIVE
TRAVERSE CITY, MICHIGAN 49686
PHONE: (231) 995-7446

ZONING INFORMATION

PARCEL ZONING:	VILLAGE COMMERCIAL (C-1)
PROPOSED USE:	RESTAURANT, RETAIL
PARCEL ADDRESS:	101 S. MAIN STREET / 102 E. RIVER STREET LELAND, MI 49654
PARCEL ID:	009-750-111-50 AND 009-750-120-00
GROSS PARCEL SIZE:	0.69 ACRES

STRUCTURE SETBACKS

FRONT: 5 FEET

SIDE: 5 FEET

REAR: 5 FEET, EXCEPT THAT TWENTY-FIVE (25) FEET SHALL BE REQUIRED WHERE A REAR YARD ABUTS A RESIDENTIAL ZONING DISTRICT

LEGAL DESCRIPTION

EARLY BIRD PARCEL
THE WESTERLY 85 FEET OF LOTS ONE (1) AND THREE (3) OF BLOCK 12 OF THE PLAT OF THE VILLAGE OF LELAND, AND ALSO ALL LANDS LYING BETWEEN THE ABOVE DESCRIBED LANDS AND LEELANAU RIVER, MEANING TO CONVEY A STRIP OF LAND 85 FEET IN WIDTH BOUNDED ON THE NORTH BY RIVER STREET, ON THE WEST BY MAIN STREET, ON THE SOUTH BY LEELANAU RIVER AND ON THE EAST BY A LINE WHICH IS 85 FEET EAST OF AND PARALLEL TO THE EASTERLY LINE OF MAIN STREET OF THE VILLAGE OF LELAND, WITH FULL RIPARIAN RIGHTS ON LEELANAU RIVER,

TOGETHER WITH ALL AND SINGULAR THE ENEMENTS, HEREDITAMENTS AND APPURTENANCES THEREUNTO BELONGING OR IN ANYWISE APPERTAINING.

BLUEBIRD PARCEL
"BLOCK 12 PARCEL" (INCLUDING THE ADJACENT WESTERLY 10 FEET OF VACATED FIRST STREET)

LOTS 2 AND 4 OF BLOCK 12 OF THE ORIGINAL PLAT OF THE VILLAGE OF LELAND, ACCORDING TO THE PLAT THEREOF RECORDED IN LIBER 1 OF MISC. RECORDS, PAGE 422, AND THE ESTERLY 15 FEET OF LOTS 1 AND 3, AND THE ADJACENT WESTERLY 10 FEET OF VACATED FIRST STREET (LIBER 1 OF MISC, PAGE 420), PART OF SECTION 9, T30N, R12W, LELAND TOWNSHIP, LEELANAU COUNTY, MICHIGAN, MORE FULLY DESCRIBED AS FOLLOWS:

COMMENCING AT THE NORTHWEST CORNER OF SAID LOT 3 OF BLOCK 12; THENCE, ALONG THE NORTHERLY LINE OF BLOCK 12, S68°32'40"E 85.00 FEET TO THE POINT OF BEGINNING; THENCE, CONTINUING ALONG SAID NORTHERLY LINE OF BLOCK 12, S68°32'40"E 125.00 FEET; THENCE S21°06'23"W 115.32 FEET; THENCE N21°06'21"E 121.98 FEET TO THE POINT OF BEGINNING.
TOGETHER WITH ALL LANDS LYING BETWEEN THE SIDELINES OF SAID PARCEL AND EXTENDING TO THE WATERS OF THE LELAND RIVER, WITH RIPARIAN RIGHTS OF RECORD INCIDENT THERETO.

PARCEL "A"
WESTERLY 10 FEET OF FIRST STREET (VACATED - LIBER 1, PAGE 430)

THE WESTERLY 10 FEET OF FIRST STREET-VACATED PER LIBER 1, PAGE 430, ADJACENT TO BLOCK 12, ORIGINAL PLAT OF THE VILLAGE OF LELAND, ACCORDING TO THE PLAT THEREOF RECORDED IN LIBER 1 OF MISC. RECORDS, PAGE 422, PART OF SECTION 9, T30N, R12W, LELAND TOWNSHIP, LEELANAU COUNTY, MICHIGAN, MORE FULLY DESCRIBED AS FOLLOWS:

BEGINNING AT THE NORTHEST CORNER OF SAID BLOCK 12; THENCE, ALONG THE EXTENSION OF THE NORTHERLY LINE OF BLOCK 12, S68°32'40"E 10.00 FEET; THENCE S21°06'23"W 112.59 FEET TO A TRAVERSE LINE ALONG THE SHORE OF THE LELAND RIVER (ALSO KNOWN AS THE CARP RIVER); THENCE, ALONG SAID TRAVERSE LINE, TOGETHER WITH ALL LANDS LYING BETWEEN THE SIDELINES OF SAID PARCEL AND EXTENDING TO THE WATERS OF THE LELAND RIVER, WITH RIPARIAN RIGHTS OF RECORD INCIDENT THERETO.

GENERAL NOTES

THESE PLANS AND SPECIFICATIONS ARE SUBJECT TO MODIFICATION DURING CONSTRUCTION WHEN CONDITIONS DEVELOP THAT WERE NOT APPARENT DURING THE DESIGN AND PREPARATION OF THESE PLANS. ALL MODIFICATIONS MUST BE APPROVED BY LOCAL JURISDICTION PRIOR TO CONSTRUCTION AND/OR IMPLEMENTATION.

BEFORE COMMENCEMENT OF WORK, THE CONTRACTOR SHALL REVIEW ALL PLANS AND SPECIFICATIONS AND THE JOB SITE. THE CONTRACTOR SHALL NOTIFY THE OWNER AND THE ENGINEER WHO PREPARED THE PLANS OF ANY DISCREPANCIES THAT MAY REQUIRE MODIFICATION TO THESE PLANS OR OF ANY FIELD CONFLICTS.

IN THE EVENT OF ANY DISCREPANCY BETWEEN ANY DRAWING AND THE FIGURES WRITTEN THEREON, THE FIGURES SHALL BE TAKEN AS CORRECT.

CONTRACTOR AGREES THAT IN ACCORDANCE WITH GENERALLY ACCEPTED CONSTRUCTION PRACTICES, THE CONTRACTOR WILL BE REQUIRED TO ASSUME SOLE AND COMPLETE RESPONSIBILITY FOR JOB SITE CONDITIONS DURING THE COURSE OF CONSTRUCTION OF THE PROJECT, INCLUDING SAFETY OF ALL PERSONS AND PROPERTY. THIS REQUIREMENT SHALL BE MADE TO APPLY CONTINUOUSLY AND NOT BE LIMITED TO NORMAL WORKING HOURS. CONTRACTOR FURTHER AGREES TO DEFEND, INDEMNIFY, AND HOLD THE OWNER AND DESIGN PROFESSIONAL HARMLESS OF ANY AND ALL LIABILITY ARISING FROM THE SOLE NEGLIGENCE OF THE OWNER OR DESIGN PROFESSIONAL.

CONTRACTOR SHALL OBTAIN ENCROACHMENT PERMITS PRIOR TO COMMENCING CONSTRUCTION INVOLVING RIGHT-OF-WAYS, AND FOR THE CONSTRUCTION, MODIFICATION, OR CONNECTION TO FACILITIES. ALL WORKMANSHIP, EQUIPMENT AND MATERIALS SHALL CONFORM TO LOCAL JURISDICTION STANDARDS AND SPECIFICATIONS.

TRAFFIC CONTROL SHALL BE PROVIDED IN ACCORDANCE WITH LOCAL JURISDICTION.

THE CONTRACTOR SHALL PROVIDE ALL LIGHTS, SIGNS, BARRICADES, FLAG MEN, OR OTHER DEVICES NECESSARY TO PROVIDE FOR PUBLIC SAFETY.

A PRECONSTRUCTION MEETING SHALL BE SCHEDULED WITH THE DEVELOPER, SERVICES PERSONNEL AND THE DEVELOPER'S CONTRACTOR. A PRECONSTRUCTION MEETING SHALL TAKE PLACE PRIOR TO THE STARTING OF ANY CONSTRUCTION ON THE SITE.

LEGEND

- PR. STORM MANHOLE
- PR. CURB INLET
- PR. CLEANOUT
- PR. SIGN
- PR. BOLLARD
- PR. LIGHT POLE
- R — PR. SIDEWALK RAMP
- PR. ASPHALT PAVEMENT (LIGHT DUTY)
- PR. CONCRETE PAVEMENT
- PR. CONCRETE SIDEWALK

811 Know what's below. Call before you dig.

THE LOCATION OF THE EXISTING UTILITIES, AS SHOWN ON THIS PLAN, ARE APPROXIMATE ONLY. IT SHALL BE THE RESPONSIBILITY OF THE CONTRACTOR TO VERIFY ACTUAL LOCATION AND DEPTH OF ALL EXISTING UTILITIES. THE OWNER AND THE SURVEYOR SHALL NOT BE RESPONSIBLE FOR ANY OMISSION OR VARIATION FROM THE LOCATION SHOWN. THE CONTRACTOR SHALL NOTIFY 'MISS DIG' AT (800) 482-7171 OR 811 THREE (3) WORKING DAYS PRIOR TO THE START OF CONSTRUCTION.

N

0' 20' 40'
SCALE: 1" = 20'

PLANS PREPARED BY:
LANDTECH
Professional Surveying & Engineering
P.O. BOX 193
1275 McGREGOR WAY
GRAWN, MI 49637
231.943.0050
www.landtechps.com

STATE OF MICHIGAN
JOHN W. URBAIN
ENGINEER
NO. 620104098
LICENSED PROFESSIONAL ENGINEER
09/27/2023

REV	DESCRIPTION	DATE	BY
1	LAND USE	09.27.2023	JWU

PROJECT
Bluebird Redevelopment
102 E. River Street
Leland, MI 49654

SHEET TITLE
Site Plan

PROJECT NO.:	22402006
DATE DRAWN:	12.13.2022
DRAWN BY:	JWU
CHECKED BY:	PGP

SHEET NUMBER
C2.0

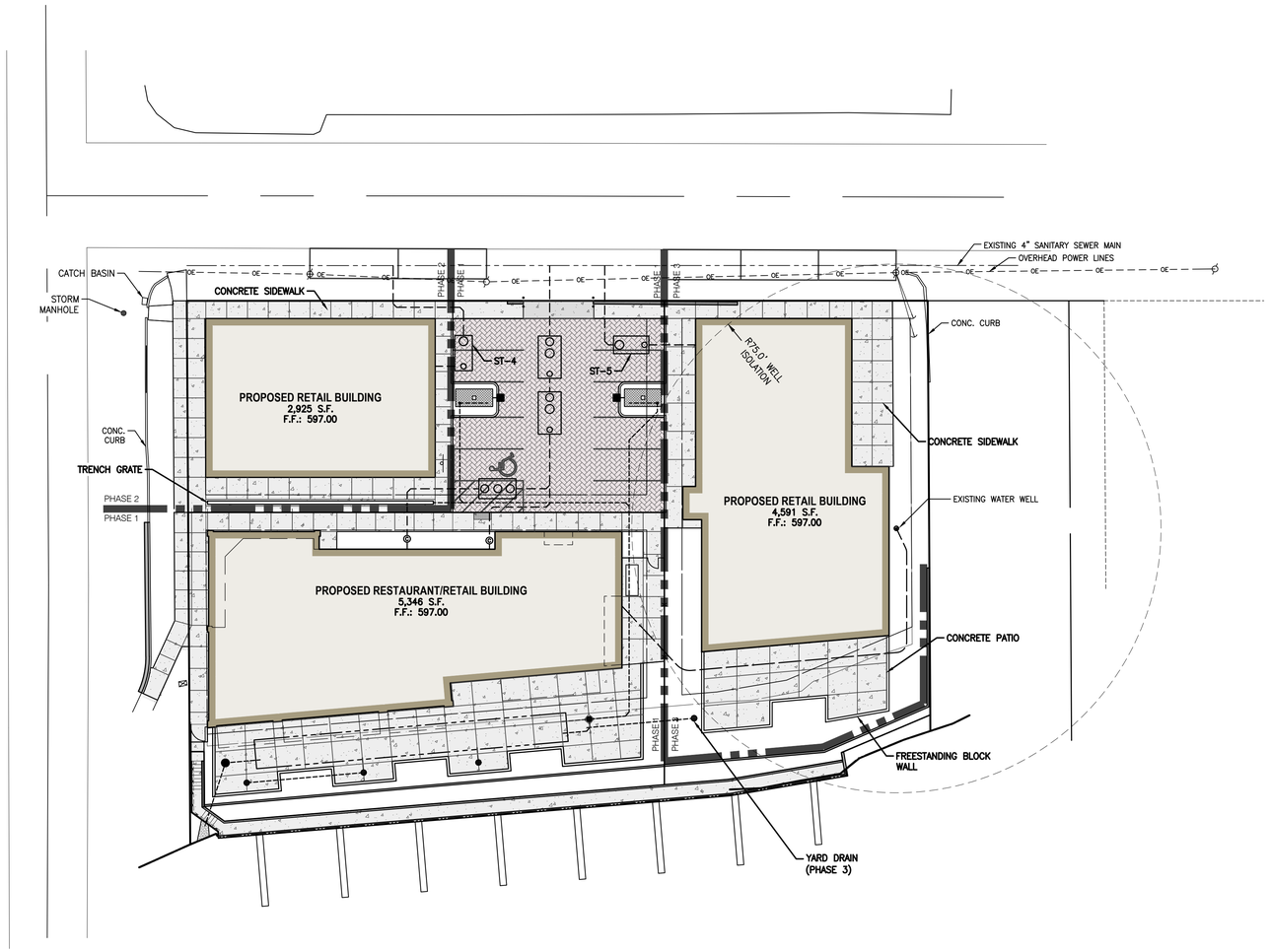

THE LOCATION OF THE EXISTING UTILITIES, AS SHOWN ON THIS PLAN, ARE APPROXIMATE ONLY. IT SHALL BE THE RESPONSIBILITY OF THE CONTRACTOR TO VERIFY ACTUAL LOCATION AND DEPTH OF ALL EXISTING UTILITIES. THE OWNER AND THE SURVEYOR SHALL NOT BE RESPONSIBLE FOR ANY OMISSION OR VARIATION FROM THE LOCATION SHOWN. THE CONTRACTOR SHALL NOTIFY "MISS DIG" AT (800) 482-7171 OR 811 THREE (3) WORKING DAYS PRIOR TO THE START OF CONSTRUCTION.

Know what's below. Call before you dig.

0' 20' 40'
SCALE: 1" = 20'

PLANS PREPARED BY:
LANDTECH
Professional Surveying & Engineering
P.O. BOX 193
1275 McGREGOR WAY
GRAWN, MI 49637
231.943.0050
www.landtechps.com

STATE OF MICHIGAN
JOHN W. URBAIN
ENGINEER
NO. 62010450098
LICENSED PROFESSIONAL ENGINEER
09/27/2023

REV	DESCRIPTION	DATE	BY
1	LAND USE	09.27.2023	JWU

PROJECT
Bluebird Redevelopment
102 E. River Street
Leland, MI 49654

SHEET TITLE
Phasing Plan

PROJECT NO.:	22402006
DATE DRAWN:	12.13.2022
DRAWN BY:	JWU
CHECKED BY:	PGP

SHEET NUMBER
C2.1

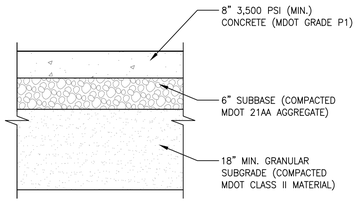

1 CONCRETE PAVEMENT
NOT TO SCALE

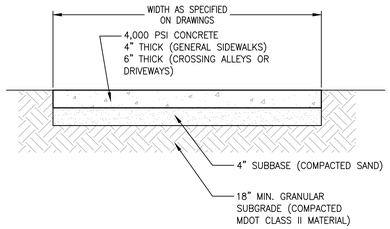

2 CONCRETE SIDEWALK
NOT TO SCALE

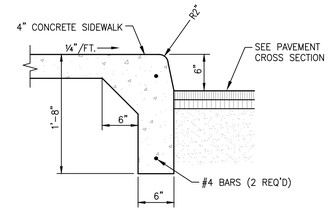

3 INTEGRAL WALK & CURB
NOT TO SCALE

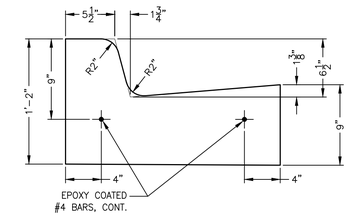

5 MDOT F4 CURB
NOT TO SCALE

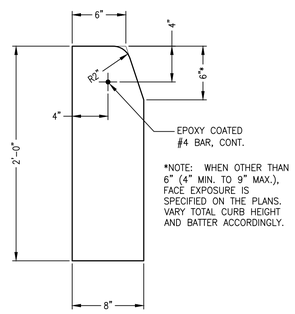

6 MDOT E4 CURB
NOT TO SCALE

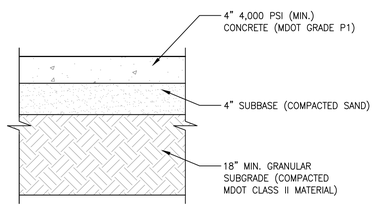

7 CONCRETE PATIO
NOT TO SCALE

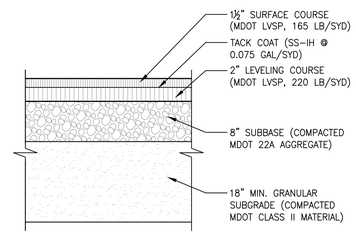

8 HMA PAVEMENT
NOT TO SCALE

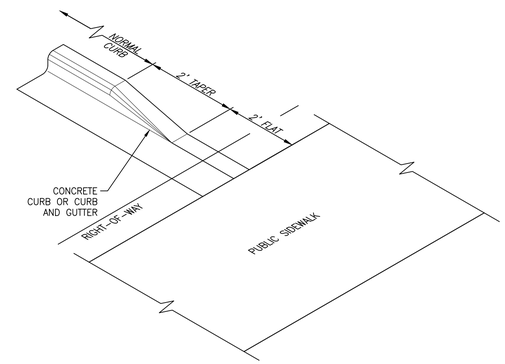

9 CURB TAPER
NOT TO SCALE

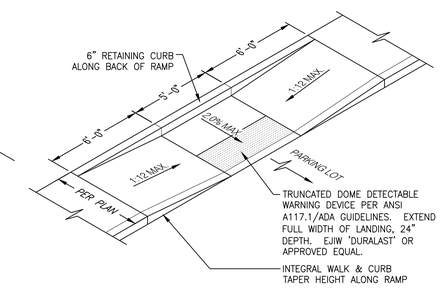

SIDEWALK RAMP TYPE P

10 SIDEWALK RAMP
NOT TO SCALE

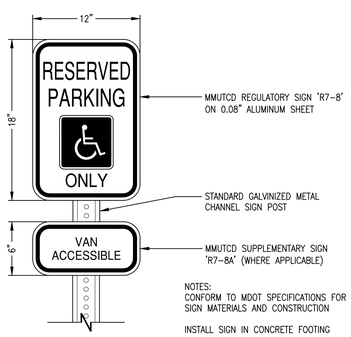

11 ACCESSIBLE PARKING SIGN
NOT TO SCALE

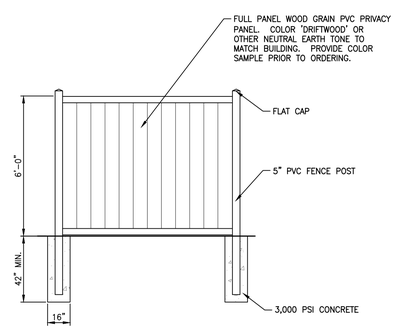

12 FENCE ELEVATION
NOT TO SCALE

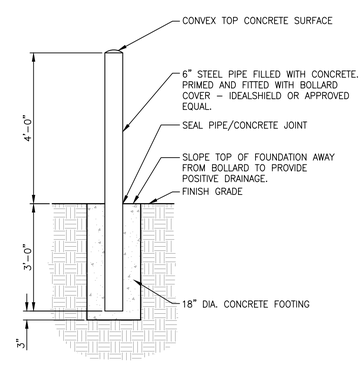

13 BOLLARD
NOT TO SCALE

PLANS PREPARED BY:
LANDTECH
Professional Surveying & Engineering
P.O. BOX 193
1275 McGREGOR WAY
GRAWN, MI 49637
231.943.0050
www.landtechps.com

STATE OF MICHIGAN
JOHN W. URBAIN
ENGINEER
NO. 6201045098
LICENSED PROFESSIONAL ENGINEER
09/27/2023

REV	DESCRIPTION	DATE	BY
1	LAND USE	09.27.2023	JWU

PROJECT
Bluebird Redevelopment
102 E. River Street
Leland, MI 49654

SHEET TITLE
Details

PROJECT NO.:	22402006
DATE DRAWN:	12.13.2022
DRAWN BY:	JWU
CHECKED BY:	PGP

SHEET NUMBER
C2.2

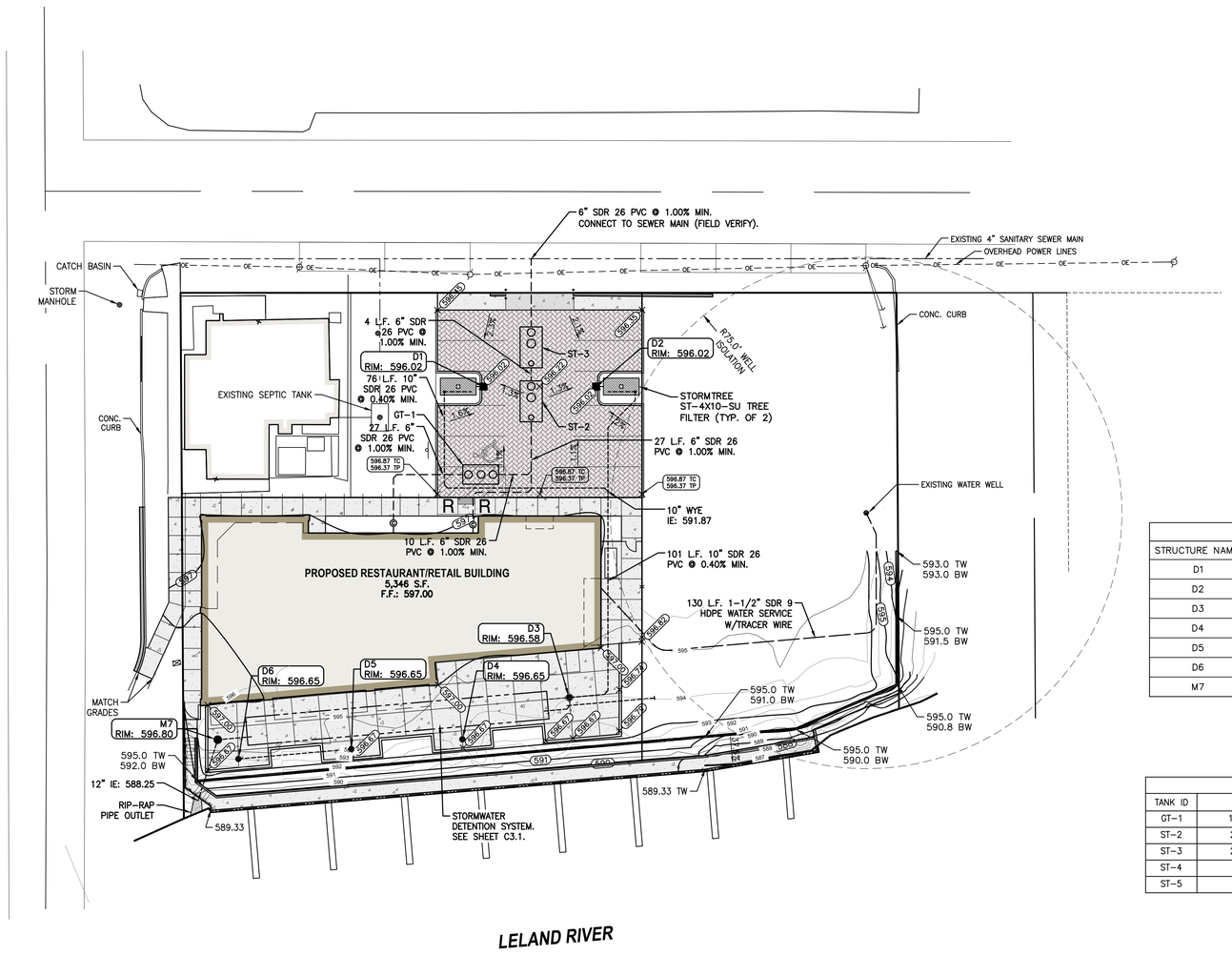

STRUCTURE TABLE					
STRUCTURE NAME:	DIAMETER	RIM EL.	CASTING	IE IN:	IE OUT
D1	24"	596.02	CURB GRATE		8" W 592.33
D2	24"	596.02	CURB GRATE		8" E 592.33
D3	24"	596.58	PED. GRATE	10" E 591.58	10" W 591.58
D4	24"	596.65	PED. GRATE		8" W 592.82
D5	24"	596.65	PED.GRATE	8" E 592.65	8" W 592.55
D6	24"	596.65	PED.GRATE	8" E 592.38	
M7	24"	596.80	SOLID COVER	8" E 592.24	8" S 589.76

TANK SCHEDULE			
TANK ID	SIZE/TYPE	IE IN	IE OUT
GT-1	1250-GAL. GREASE TRAP		
ST-2	2000-GAL. SEPTIC TANK		
ST-3	2000-GAL. SEPTIC TANK		
ST-4	1000-GAL SEPTIC TANK		
ST-5	1000-GAL SEPTIC TANK		

UTILITY NOTES

ALL TRENCH EXCAVATION AND BACKFILL SHALL BE IN ACCORDANCE WITH LOCAL JURISDICTION.

THE CONTRACTOR SHALL BE HELD RESPONSIBLE FOR ANY AND ALL DAMAGE TO EXISTING STRUCTURES AND/OR UTILITIES DURING CONSTRUCTION. PROPER REPAIR SHALL BE DONE TO THE SATISFACTION OF THE APPROPRIATE UTILITY COMPANY.

THE CONTRACTOR SHALL NOTIFY ALL UTILITY COMPANIES 72 HOURS PRIOR TO ANY EXCAVATION SO THAT UTILITY LINES CAN BE MARKED.

THE CONTRACTOR SHALL COORDINATE THE WORK TO AVOID CONFLICTS BETWEEN SEWERS, STORM DRAINS, AND WATER MAINS. TEMPORARY REPAIRS TO ALL TRENCHES WITHIN THE TRAVELED WAY, ON EXISTING ROADS, SHALL BE MADE WITHIN TWENTY-FOUR (24) HOURS OF THE TRENCH OPENING. MINIMUM TEMPORARY REPAIRS SHALL CONSIST OF BACKFILLING AND COMPACTING 6" OF AGGREGATE BASE AND 1" OF TEMPORARY ASPHALTIC SURFACE.

EXISTING UNDERGROUND FACILITIES, AS SHOWN, ARE APPROXIMATE ONLY AND WERE OBTAINED FROM AVAILABLE UTILITY RECORDS. THE ENGINEER ASSUMES NO RESPONSIBILITY FOR THEIR ACCURACY OR COMPLETENESS. IT SHALL BE THE CONTRACTOR'S RESPONSIBILITY TO CONTACT ALL LOCAL UTILITIES AND TO HAVE ALL FACILITIES LOCATED AND EXPOSED TO VERIFY THE CLEARANCE OF NEW PIPE LINE CROSSINGS BEFORE CONSTRUCTION OF NEW PIPE LINES COMMENCES.

ANY RELOCATION OF PUBLIC UTILITIES SHALL BE DONE IN ACCORDANCE WITH ANY AND ALL REQUIREMENTS OF THE UTILITY COMPANY AND WITH REGARD TO THE REQUIRED FEES, BONDS, PERMITS, WORKING CONDITIONS, ETC. OF SAID COMPANY.

ABANDONED UNDERGROUND STRUCTURES ENCOUNTERED SHALL BE REMOVED TO SUFFICIENT DEPTH TO ALLOW UNDERGROUND LINES TO CROSS.

PRIOR TO FINAL PREPARATION OF THE SUBGRADE AND PLACEMENT OF BASE MATERIAL, ALL UNDERGROUND UTILITY MAINS SHALL BE INSTALLED AND SERVICE CONNECTIONS STUBBED OUT BEYOND THE CURB LINE. SERVICES FROM PUBLIC UTILITIES AND SANITARY SEWERS SHALL BE MADE IN A MANNER THAT WILL MINIMIZE THE DISTURBANCE OF THE ADJACENT STREET. ALL CONDUITS SHALL BE SCHEDULE 40 AND BURIED AT A MINIMUM DEPTH OF 3 FEET.

Know what's **below.**
Call before you dig.

THE LOCATION OF THE EXISTING UTILITIES, AS SHOWN ON THIS PLAN, ARE APPROXIMATE ONLY. IT SHALL BE THE RESPONSIBILITY OF THE CONTRACTOR TO VERIFY ACTUAL LOCATION AND DEPTH OF ALL EXISTING UTILITIES. THE OWNER AND THE SURVEYOR SHALL NOT BE RESPONSIBLE FOR ANY OMISSION OR VARIATION FROM THE LOCATION SHOWN. THE CONTRACTOR SHALL NOTIFY 'MISS DIG' AT (800) 482-7171 OR 811 THREE (3) WORKING DAYS PRIOR TO THE START OF CONSTRUCTION.

LEGEND

- PR. STORM MANHOLE
- PR. CURB INLET
- PR. CLEANOUT
- PR. SIGN
- PR. BOLLARD
- PR. LIGHT POLE
- R — PR. SIDEWALK RAMP
- PR. ASPHALT PAVEMENT (LIGHT DUTY)
- PR. CONCRETE PAVEMENT
- PR. CONCRETE SIDEWALK

N

0' 20' 40'
SCALE: 1" = 20'

PLANS PREPARED BY:
LANDTECH
Professional Surveying & Engineering
P.O. BOX 193
1275 McGREGOR WAY
GRAWN, MI 49637
231.943.0050
www.landtechps.com

STATE OF MICHIGAN
JOHN W. URBAIN
ENGINEER
NO. 620104508
LICENSED PROFESSIONAL ENGINEER
09/27/2023

REV	DESCRIPTION	DATE	BY
1	LAND USE	09.27.2023	JWU

PROJECT
Bluebird Redevelopment
102 E. River Street
Leland, MI 49654

SHEET TITLE
Grading And Utility Plan

PROJECT NO.:	22402006
DATE DRAWN:	12.13.2022
DRAWN BY:	JWU
CHECKED BY:	PGP

SHEET NUMBER
C3.0

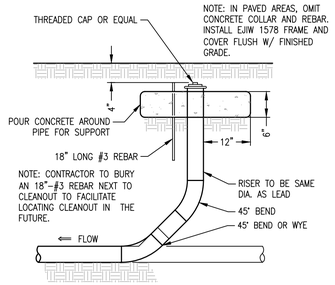

1 SANITARY CLEAN-OUT

NOT TO SCALE

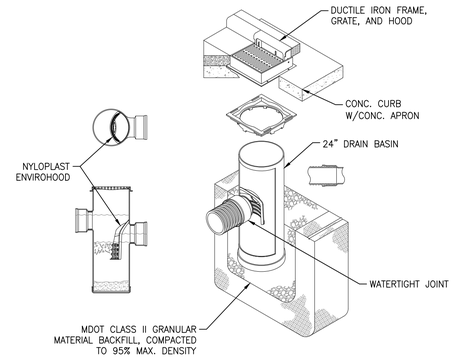

2 CURB INLET

NOT TO SCALE

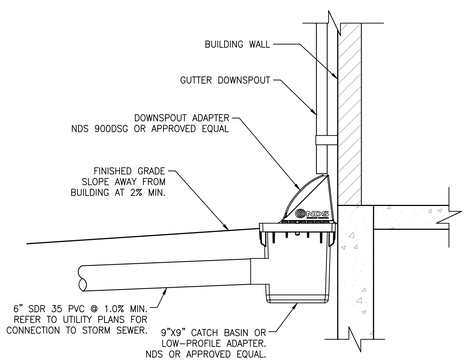

3 DOWNSPOUT CONNECTION

NOT TO SCALE

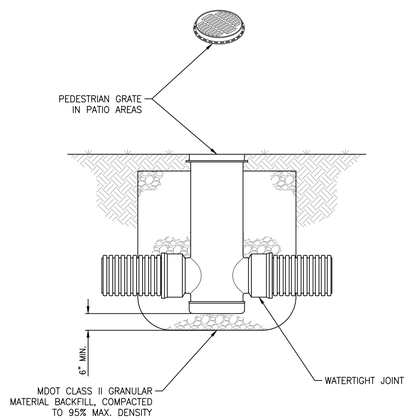

4 18" DRAINAGE STRUCTURE

NOT TO SCALE

ACCEPTABLE FILL MATERIALS: STORMTECH SC-310 CHAMBER SYSTEMS

MATERIAL LOCATION		DESCRIPTION	AASHTO MATERIAL CLASSIFICATIONS	COMPACTION / DENSITY REQUIREMENT
D	**FINAL FILL:** FILL MATERIAL FOR LAYER 'D' STARTS FROM THE TOP OF THE 'C' LAYER TO THE BOTTOM OF FLEXIBLE PAVEMENT OR UNPAVED FINISHED GRADE ABOVE. NOTE THAT PAVEMENT SUBBASE MAY BE PART OF THE 'D' LAYER.	ANY SOIL/ROCK MATERIALS, NATIVE SOILS, OR PER ENGINEER'S PLANS. CHECK PLANS FOR PAVEMENT SUBGRADE REQUIREMENTS.	N/A	PREPARE PER SITE DESIGN ENGINEER'S PLANS. PAVED INSTALLATIONS MAY HAVE STRINGENT MATERIAL AND PREPARATION REQUIREMENTS.
C	**INITIAL FILL:** FILL MATERIAL FOR LAYER 'C' STARTS FROM THE TOP OF THE EMBEDMENT STONE ('B' LAYER) TO 18" (450 mm) ABOVE THE TOP OF THE CHAMBER. NOTE THAT PAVEMENT SUBBASE MAY BE A PART OF THE 'C' LAYER.	GRANULAR WELL-GRADED SOIL/AGGREGATE MIXTURES, <35% FINES OR PROCESSED AGGREGATE. MOST PAVEMENT SUBBASE MATERIALS CAN BE USED IN LIEU OF THIS LAYER.	AASHTO M145[1] A-1, A-2-4, A-3 OR AASHTO M43[1] 3, 357, 4, 467, 5, 56, 57, 6, 67, 68, 7, 78, 8, 89, 9, 10	BEGIN COMPACTIONS AFTER 12" (300 mm) OF MATERIAL OVER THE CHAMBERS IS REACHED. COMPACT ADDITIONAL LAYERS IN 6" (150 mm) MAX LIFTS TO A MIN. 95% PROCTOR DENSITY FOR WELL GRADED MATERIAL AND 95% RELATIVE DENSITY FOR PROCESSED AGGREGATE MATERIALS. ROLLER GROSS VEHICLE WEIGHT NOT TO EXCEED 12,000 lbs (53 kN). DYNAMIC FORCE NOT TO EXCEED 20,000 lbs (89 kN).
B	**EMBEDMENT STONE:** FILL SURROUNDING THE CHAMBERS FROM THE FOUNDATION STONE ('A' LAYER) TO THE 'C' LAYER ABOVE.	CLEAN, CRUSHED, ANGULAR STONE	AASHTO M43[1] 3, 357, 4, 467, 5, 56, 57	NO COMPACTION REQUIRED.
A	**FOUNDATION STONE:** FILL BELOW CHAMBERS FROM THE SUBGRADE UP TO THE FOOT (BOTTOM) OF THE CHAMBER.	CLEAN, CRUSHED, ANGULAR STONE	AASHTO M43[1] 3, 357, 4, 467, 5, 56, 57	PLATE COMPACT OR ROLL TO ACHIEVE A FLAT SURFACE.[2,3]

PLEASE NOTE:
1. THE LISTED AASHTO DESIGNATIONS ARE FOR GRADATIONS ONLY. THE STONE MUST ALSO BE CLEAN, CRUSHED, ANGULAR. FOR EXAMPLE, A SPECIFICATION FOR #4 STONE WOULD STATE: "CLEAN, CRUSHED, ANGULAR NO. 4 (AASHTO M43) STONE".
2. STORMTECH COMPACTION REQUIREMENTS ARE MET FOR 'A' LOCATION MATERIALS WHEN PLACED AND COMPACTED IN 6" (150 mm) (MAX) LIFTS USING TWO FULL COVERAGES WITH A VIBRATORY COMPACTOR.
3. WHERE INFILTRATION SURFACES MAY BE COMPROMISED BY COMPACTION, FOR STANDARD DESIGN LOAD CONDITIONS, A FLAT SURFACE MAY BE ACHIEVED BY RAKING OR DRAGGING WITHOUT COMPACTION EQUIPMENT. FOR SPECIAL LOAD DESIGNS, CONTACT STORMTECH FOR COMPACTION REQUIREMENTS.
4. ONCE LAYER 'C' IS PLACED, ANY SOIL/MATERIAL CAN BE PLACED IN LAYER 'D' UP TO THE FINISHED GRADE. MOST PAVEMENT SUBBASE SOILS CAN BE USED TO REPLACE THE MATERIAL REQUIREMENTS OF LAYER 'C' OR 'D' AT THE SITE DESIGN ENGINEER'S DISCRETION.

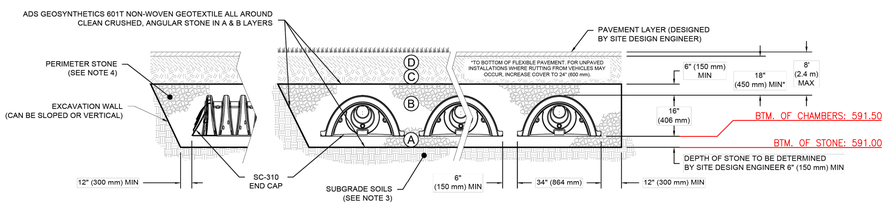

NOTES:

1. CHAMBERS SHALL MEET THE REQUIREMENTS OF ASTM F2922 (POLETHYLENE) OR ASTM F2418 (POLYPROPYLENE), "STANDARD SPECIFICATION FOR CORRUGATED WALL STORMWATER COLLECTION CHAMBERS".
2. SC-310 CHAMBERS SHALL BE DESIGNED IN ACCORDANCE WITH ASTM F2787 "STANDARD PRACTICE FOR STRUCTURAL DESIGN OF THERMOPLASTIC CORRUGATED WALL STORMWATER COLLECTION CHAMBERS".
3. THE SITE DESIGN ENGINEER IS RESPONSIBLE FOR ASSESSING THE BEARING RESISTANCE (ALLOWABLE BEARING CAPACITY) OF THE SUBGRADE SOILS AND THE DEPTH OF FOUNDATION STONE WITH CONSIDERATION FOR THE RANGE OF EXPECTED SOIL MOISTURE CONDITIONS.
4. PERIMETER STONE MUST BE EXTENDED HORIZONTALLY TO THE EXCAVATION WALL FOR BOTH VERTICAL AND SLOPED EXCAVATION WALLS.
5. REQUIREMENTS FOR HANDLING AND INSTALLATION:
   - TO MAINTAIN THE WIDTH OF CHAMBERS DURING SHIPPING AND HANDLING, CHAMBERS SHALL HAVE INTEGRAL, INTERLOCKING STACKING LUGS.
   - TO ENSURE A SECURE JOINT DURING INSTALLATION AND BACKFILL, THE HEIGHT OF THE CHAMBER JOINT SHALL NOT BE LESS THAN 2".
   - TO ENSURE THE INTEGRITY OF THE ARCH SHAPE DURING INSTALLATION, a) THE ARCH STIFFNESS CONSTANT AS DEFINED IN SECTION 6.2.8 OF ASTM F2922 SHALL BE GREATER THAN OR EQUAL TO 400 LBS/FT/%. AND b) TO RESIST CHAMBER DEFORMATION DURING INSTALLATION AT ELEVATED TEMPERATURES (ABOVE 73° F / 23° C), CHAMBERS SHALL BE PRODUCED FROM REFLECTIVE GOLD OR YELLOW COLORS.

5 STORM WATER INFILTRATION SYSTEM CROSS SECTION

NOT TO SCALE

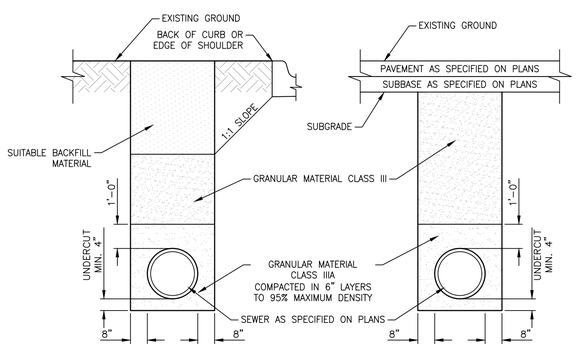

6 TRENCH DETAIL - STORM SEWER

NOT TO SCALE

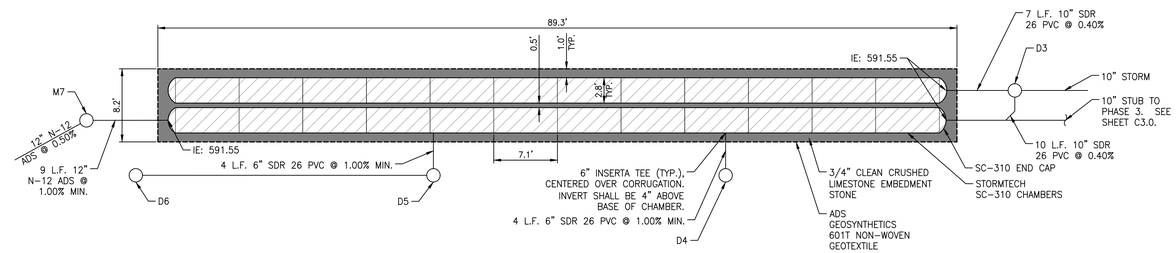

8 STORM WATER INFILTRATION SYSTEM PLAN

NOT TO SCALE

SC-310
STANDARD CROSS SECTION

DATE: 9/12/22 | DRAWN: KLJ | CHECKED: KLJ | PROJECT #:

DATE	DRWN.	CHKD	DESCRIPTION

StormTech® Chamber System
888-892-2694 | WWW.STORMTECH.COM

ADS 4640 TRUEMAN BLVD HILLIARD, OH 43026

THIS DRAWING HAS BEEN PREPARED BASED ON INFORMATION PROVIDED TO ADS UNDER THE DIRECTION OF THE SITE DESIGN ENGINEER OR OTHER PROJECT REPRESENTATIVE. THE SITE DESIGN ENGINEER SHALL REVIEW THIS DRAWING PRIOR TO CONSTRUCTION. IT IS THE ULTIMATE RESPONSIBILITY OF THE SITE DESIGN ENGINEER TO ENSURE PROPER APPLICATION OF ALL ADS PRODUCTS AS SHOWN ON THIS DRAWING.

1 SHEET OF 1

PLANS PREPARED BY:
LANDTECH
Professional Surveying & Engineering
P.O. BOX 193
1275 McGREGOR WAY
GRAWN, MI 49637
231.943.0050
www.landtechps.com

STATE OF MICHIGAN
JOHN W. URBAIN
ENGINEER NO. 62010450098
LICENSED PROFESSIONAL ENGINEER
09/27/2023

REV	DESCRIPTION	DATE	BY
1	LAND USE	09.27.2023	JWU

PROJECT
Bluebird Redevelopment
102 E. River Street
Leland, MI 49654

SHEET TITLE
Details

PROJECT NO.:	22402006
DATE DRAWN:	12.13.2022
DRAWN BY:	JWU
CHECKED BY:	PGP

SHEET NUMBER
C3.1

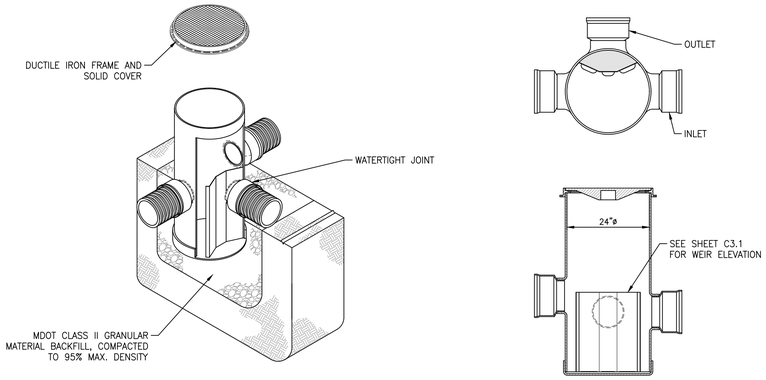

1 STORM WATER OVERFLOW STRUCTURE

NOT TO SCALE

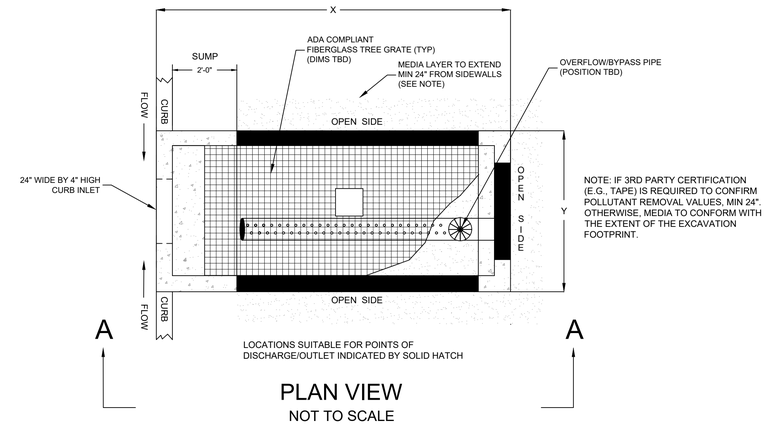

NOTE: IF 3RD PARTY CERTIFICATION (E.G., TAPE) IS REQUIRED TO CONFIRM POLLUTANT REMOVAL VALUES, MIN 24". OTHERWISE, MEDIA TO CONFORM WITH THE EXTENT OF THE EXCAVATION FOOTPRINT.

PLAN VIEW

NOT TO SCALE

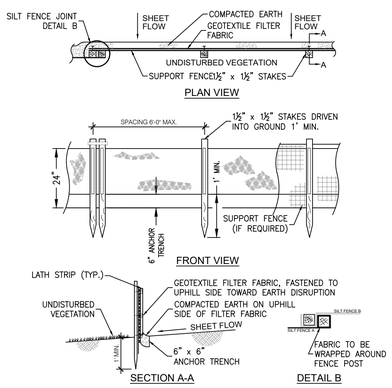

2 SILT FENCE

NOT TO SCALE

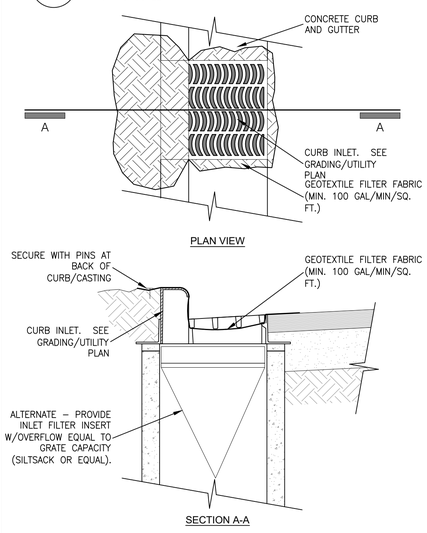

3 INLET PROTECTION

NOT TO SCALE

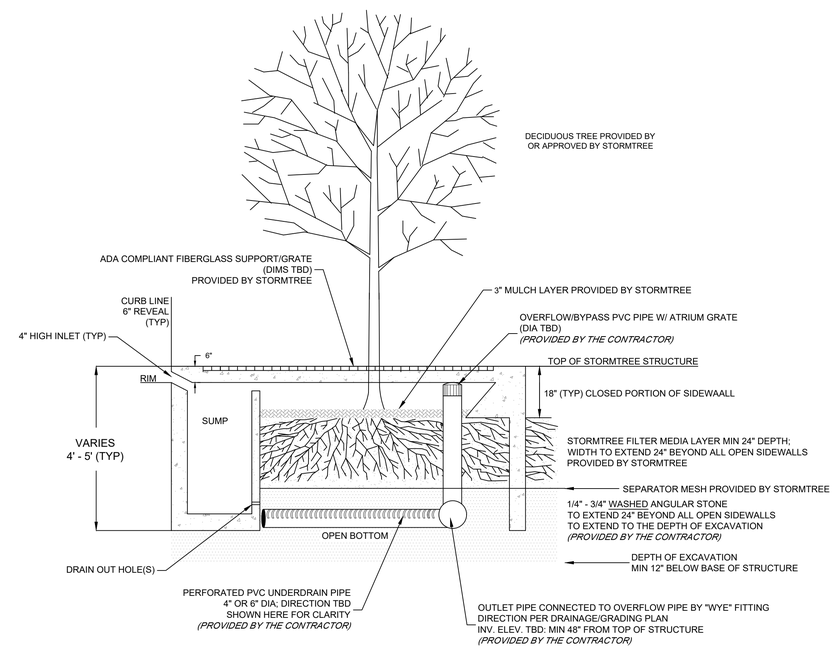

SECTION A-A

NOT TO SCALE

SITE SPECIFIC DATA CURB ENTRY (SHORT SIDE)						
LOCATION	STORMTREE MODEL	INLET RIM/THROAT ELEV.	OUTLET PIPE ELEV.	TREATMENT FLOW RATE (CFS)	BYPASS FLOW RATE (CFS)	OUTLET PIPE (DIA)
ex. PARKING LOT	ST-4X8-SU	*111.12*	*114.84*	0.102	*1.8*	*8"*

STORMTREE® INTERNAL SUMP SERIES CURB ENTRY (SHORT SIDE) W/ INTERNAL BYPASS

STORMTREE®

Thinking Outside the Concrete Box™

24 Corliss Street, Suite 9092, Providence, RI 02940 (401) 626-8999 www.storm-tree.com

THIS DESIGN, DRAWING, AND TECHNOLOGY IS PROPRIETARY AND THE PROPERTY OF STORMTREE. AND MAY NOT BE ALTERED OR REPRODUCED WITHOUT THE EXPRESSED CONSENT OF STORMTREE
PATENT # US 8,333,885,10,563,392; OTHER PATENTS PENDING

4 STORMTREE® TREE FILTER

NOT TO SCALE

PLANS PREPARED BY:
LANDTECH
Professional Surveying & Engineering
P.O. BOX 193
1275 McGREGOR WAY
GRAWN, MI 49637
231.943.0050
www.landtechps.com

STATE OF MICHIGAN
JOHN W. URBAIN
ENGINEER
NO. 6201045098
LICENSED PROFESSIONAL ENGINEER
09/27/2023

REV	DESCRIPTION	DATE	BY
1	LAND USE	09.27.2023	JWU

PROJECT
Bluebird Redevelopment
102 E. River Street
Leland, MI 49654

SHEET TITLE
Details

PROJECT NO.:	22402006
DATE DRAWN:	12.13.2022
DRAWN BY:	JWU
CHECKED BY:	PGP

SHEET NUMBER
C3.2